August 14, 2020

U.S. Department of Transportation
Federal Highway Administration

1200 New Jersey Ave., SE
Washington, D.C. 20590

In Reply Refer To:
HSST-1/B-345

Mr. James Fu
State of Hawaii, Department of Transportation
601 Kamokila Boulevard, Room 611
Kapolei, HI 96707
USA

Dear Mr. Fu:

This letter is in response to your March 31, 2020 request for the Federal Highway Administration (FHWA) to review a roadside safety device, hardware, or system for eligibility for reimbursement under the Federal-aid highway program. This FHWA letter of eligibility is assigned FHWA control number B-345 and is valid until a subsequent letter is issued by FHWA that expressly references this device.

Decision

The following device is eligible within the length-of-need, with details provided in the form which is attached as an integral part of this letter:

- HDOT 34" Tall Aesthetic Concrete Bridge Rail

Scope of this Letter

To be found eligible for Federal-aid funding, new roadside safety devices should meet the crash test and evaluation criteria contained in the American Association of State Highway and Transportation Officials'(AASHTO) Manual for Assessing Safety Hardware (MASH). However, the FHWA, the Department of Transportation, and the United States Government do not regulate the manufacture of roadside safety devices. Eligibility for reimbursement under the Federal-aid highway program does not establish approval, certification or endorsement of the device for any particular purpose or use.

This letter is not a determination by the FHWA, the Department of Transportation, or the United States Government that a vehicle crash involving the device will result in any particular outcome, nor is it a guarantee of the in-service performance of this device. Proper manufacturing, installation, and maintenance are required in order for this device to function as tested.

This finding of eligibility is limited to the crashworthiness of the system and does not cover other structural features, nor conformity with the Manual on Uniform Traffic Control Devices.

Eligibility for Reimbursement

Based solely on a review of crash test results and certifications submitted by the manufacturer, and the crash test laboratory, FHWA agrees that the device described herein meets the crash test and evaluation criteria of the AASHTO's MASH. Therefore, the device is eligible for reimbursement under the Federal-aid highway program if installed under the range of tested conditions.

Name of system: HDOT 34" Tall Aesthetic Concrete Bridge Rail
Type of system: Longitudinal Barrier
Test Level: MASH Test Level 3 (TL 3)
Testing conducted by: Midwest Roadside Safety Facility
Date of request: March 31, 2020

FHWA concurs with the recommendation of the accredited crash testing laboratory on the attached form

Full Description of the Eligible Device

The device and supporting documentation, including reports of the crash tests or other testing done, videos of any crash testing, and/or drawings of the device, are described in the attached form.

Notice

This eligibility letter is issued for the subject device as tested. Modifications made to the device are not covered by this letter. Any modifications to this device should be submitted to the user (i.e., state DOT) as per their requirements.

You are expected to supply potential users with sufficient information on design, installation and maintenance requirements to ensure proper performance.

You are expected to certify to potential users that the hardware furnished has the same chemistry, mechanical properties, and geometry as that submitted for review, and that it will meet the test and evaluation criteria of AASHTO's MASH.

Issuance of this letter does not convey property rights of any sort or any exclusive privilege. This letter is based on the premise that information and reports submitted by you are accurate and correct. We reserve the right to modify or revoke this letter if: (1) there are any inaccuracies in the information submitted in support of your request for this letter, (2) the qualification testing was flawed, (3) in-service performance or other information reveals safety problems, (4) the system is significantly different from the version that was crash tested, or (5) any other information indicates that the letter was issued in error or otherwise does not reflect full and complete information about the crashworthiness of the system.

Standard Provisions

- To prevent misunderstanding by others, this letter of eligibility designated as FHWA control number B-345 shall not be reproduced except in full. This letter and the test documentation upon which it is based are public information. All such letters and documentation may be reviewed upon request.

- This letter shall not be construed as authorization or consent by the FHWA to use, manufacture, or sell any patented system for which the applicant is not the patent holder.

- This FHWA eligibility letter is not an expression of any Agency view, position, or determination of validity, scope, or ownership of any intellectual property rights to a specific device or design. Further, this letter does not impute any distribution or licensing rights to the requester. This FHWA eligibility letter determination is made based solely on the crash-testing information submitted by the requester. The FHWA reserves the right to review and revoke an earlier eligibility determination after receipt of subsequent information related to crash testing.

- If the subject device is a patented product it may be considered to be proprietary. If proprietary systems are specified by a highway agency for use on Federal-aid projects: (a) they must be supplied through competitive bidding with equally suitable unpatented items; (b) the highway agency must certify that they are essential for synchronization with the existing highway facilities or that no equally suitable alternative exists; or (c) they must be used for research or for a distinctive type of construction on relatively short sections of road for experimental purposes. Our regulations concerning proprietary products are contained in Title 23, Code of Federal Regulations, Section 635.411.

Sincerely,

Michael S. Griffith

Michael S. Griffith
Director, Office of Safety Technologies
Office of Safety

Enclosures

Request for Federal Aid Reimbursement Eligibility of Highway Safety Hardware

Submitter	Date of Request:	March 31, 2020	◉ New ○ Resubmission
	Name:	James Fu, S.E.	
	Company:	State of Hawaii, Department of Transportation	
	Address:	601 Kamokila Boulevard, Room 611, Kapolei, HI 96707	
	Country:	USA	
	To:	Michael S. Griffith, Director FHWA, Office of Safety Technologies	

I request the following devices be considered eligible for reimbursement under the Federal-aid highway program.

Device & Testing Criterion - Enter from right to left starting with Test Level

System Type	Submission Type	Device Name / Variant	Testing Criterion	Test Level
'B': Rigid/Semi-Rigid Barriers (Roadside, Median, Bridge Railings)	◉ Physical Crash Testing ○ Engineering Analysis	HDOT 34'' Tall Aesthetic Concrete Bridge Rail	AASHTO MASH	TL3

By submitting this request for review and evaluation by the Federal Highway Administration, I certify that the product(s) was (were) tested in conformity with the AASHTO Manual for Assessing Safety Hardware and that the evaluation results meet the appropriate evaluation criteria in the MASH.

Individual or Organization responsible for the product:

Contact Name:	James Fu, S.E.	Same as Submitter ☒
Company Name:	State of Hawaii, Department of Transportation	Same as Submitter ☒
Address:	601 Kamokila Boulevard, Room 611, Kapolei, HI 96707	Same as Submitter ☒
Country:	USA	Same as Submitter ☒

Enter below all disclosures of financial interests as required by the FHWA `Federal-Aid Reimbursement Eligibility Process for Safety Hardware Devices' document.

The Midwest Roadside Safety Facility (MwRSF) and its employees were asked to perform crash testing and evaluate the device named herein for the Hawaii Department of Transportation.

MwRSF's financial interests are as follows:
(i) No compensation, including wages, salaries, commissions, professional fees, or fees for business referrals;
(ii) Consulting relationships consist of answering design and implementation questions;
(iii) Research funding or other forms of research support include continued funding for roadside safety research projects with MwRSF;
(iv) No patents, copyrights, or other intellectual property interests for this system;
(v) No licenses or contractual relationships for this system; and
(vi) No business ownership and investment interests for this system.

PRODUCT DESCRIPTION

(●) New Hardware or Significant Modification ( ) Modification to Existing Hardware

The Hawaii Department of Transportation (HDOT) 34-in. tall aesthetic concrete bridge rail contained five concrete barrier segments consisting of two 11-ft long end segments and three 22-ft long interior barrier segments. The bridge rail was 34 in. tall relative to the traffic-side tarmac and 10 in. wide at the top and the bottom. The top surface had ¾-in. chamfered edges. Recessed aesthetic lines, ½-in. deep, were located 7 in. below the top surface and 9 in. above the bottom surface on the traffic- and back-side faces. The main aesthetic feature on this concrete bridge rail was 60-in. wide x 15-in. tall x ½-in. deep recessed panels on both the traffic-side and back-side faces. The edges of the panels transitioned to the face of the rail using 2H:1V slope. The concrete mix for the bridge rail sections required a minimum 28-day compressive strength of 4,000 psi.

Steel reinforcement in the barrier consisted of ASTM A615 Grade 60 rebar. Each concrete bridge rail segment consisted of eight no. 5 longitudinal bars (four per face) that were vertically spaced 10 in. apart. Vertical stirrups were also provided using no. 5 rebar, which were spaced on 12-in. centers on the back-side face and on 6-in. centers on the traffic-side face. Vertical reinforcement bars were anchored to an existing concrete tarmac on both the traffic-side and back-side faces to a depth of 8 in. and epoxied with Hilti HIT RE-500 V3 in order to develop the full tensile strength of the bar. The minimum bond strength of the epoxy adhesive was 1,560 psi after a two-day cure.

The existing concrete tarmac surface was milled to a depth of 2 in. and filled with low-strength concrete after removal of the formwork to replicate the wearing surface of a bridge deck. Each barrier segment was separated by an expansion joint consisting of a ½-in. open gap that was filled with expansion joint sealant. The expansion joint assembly consisted of three 24-in. long no. 8 horizontal smooth rebar placed within PVC tubes and caps that were cast into the parapet.

Note, HDOT's 34-in. tall, Aesthetic Concrete Bridge Rail was fabricated for evaluation of the length of need (LON) of the interior barrier segments of the bridge rail. Therefore, the crashworthiness of the end segments and the transition buttresses were not evaluated in this testing program. It is recommended that end sections and buttresses be designed with similar or greater capacity to the bridge rail. Further, reducing the spacing of the vertical reinforcement near the end sections of the barrier could potentially mitigate some of the cracking and damage that was observed in the full-scale crash tests and reduce the need for repair of the bridge rail.

CRASH TESTING

By signature below, the Engineer affiliated with the testing laboratory, agrees in support of this submission that all of the critical and relevant crash tests for this device listed above were conducted to meet the MASH test criteria. The Engineer has determined that no other crash tests are necessary to determine the device meets the MASH criteria.

Engineer Name:	Ronald Faller	
Engineer Signature:	Ronald K. Faller ou=Midwest Roadside Safety Facility, email=rfaller1@unl.edu, c=US Digitally signed by Ronald K. Faller DN: cn=Ronald K. Faller, o=University of Nebraska-Lincoln, Date: 2020.04.17 08:52:20 -05'00'	
Address:	130 Whittier Research Center, 2200 Vine Street, Lincoln, NE 68583-0853	Same as Submitter ☐
Country:	USA	Same as Submitter ☐

A brief description of each crash test and its result:

Required Test Number	Narrative Description	Evaluation Results
3-10 (1100C)	Lab test no.: H34BR-1 Date of test: April 17, 2019 Crash test report no.: TRP-03-420-19 A 2,430-lb small car with a simulated occupant seated in the front passenger seat, impacted the concrete bridge rail 42 9/16-in. upstream from the expansion joint between barrier nos. 3 and 4 at a speed of 62.4 mph and at an angle of 25.7 degrees, resulting in a lateral impact force of 58.8 kips and an impact severity of 59.2 kip-ft. At 0.160 sec after impact, the vehicle became parallel to the system with a speed of 50.9 mph. At 0.290 sec, the vehicle exited the system at a speed of 43.0 mph and angle of 6.9 degrees. The vehicle was successfully redirected. Exterior vehicle damage was moderate and the interior occupant compartment deformations were minor with a maximum deformation of 1.9 in., consequently not violating the limits established in MASH 2016. Damage to the concrete bridge rail was minor, consisting of minor cracks and spalling of the concrete in several locations. The maximum lateral permanent set of the barrier system was 0.2 in. The maximum lateral dynamic barrier deflection, including tipping of the barrier along the top of the surface, was 0.3 in. at the upstream end of barrier no. 3. The working width of the system was 10.3 inches. There was no potential for the barrier to intrude into the occupant compartment. All vehicle decelerations, occupant compartment deformations, the maximum angular displacements, occupant ridedown accelerations (ORAs), and occupant impact velocities (OIVs) fell within the recommended safety limits established in MASH 2016. The test vehicle showed no tendency for rollover and did not penetrate or ride over the barrier.	PASS

Required Test Number	Narrative Description	Evaluation Results
3-11 (2270P)	Lab test no. H34BR-2 Date of test April 29, 2019 Crash test report no. TRP-03-420-19 A 5,001-lb pickup truck with a simulated occupant seated in the front passenger seat, impacted the concrete bridge rail 51 15/16 in. upstream from the expansion joint between barrier nos. 2 and 3 at a speed of 64.0 mph at an angle of 25.4 degrees, resulting in a lateral impact force of 88.6 kips and an impact severity of 126.4 kip-ft. At 0.192 sec after impact, the vehicle became parallel to the system with a speed of 50.9 mph. At 0.408 sec, the vehicle exited the system at a speed of 44.0 mph and an angle of 8.9 degrees. The vehicle was successfully redirected. Exterior vehicle damage was moderate and the interior occupant compartment deformations were moderate, with a maximum deformation of 5.4 in., consequently not violating the limits established in MASH 2016. Damage to the barrier was minimal, consisting of tire and scuff marks and concrete spalling and cracking. The maximum lateral permanent set of the barrier system was 0.1 in., including barrier and deck panel shift. The maximum lateral dynamic barrier deflection, including tipping of the barrier along the top surface was 0.2 in. at the upstream end of barrier no. 3. The working width of the system was 17.2 inches. There was no potential for the barrier to intrude into the occupant compartment. All vehicle decelerations, occupant compartment deformations, the maximum angular displacements, occupant ridedown accelerations (ORAs), and occupant impact velocities (OIVs) fell within the recommended safety limits established in MASH 2016. The test vehicle showed no tendency for rollover and did not penetrate or ride over the barrier.	PASS
3-20 (1100C)	Test no. 3-20 is not applicable for this type of system.	Non-Relevant Test, not conducted
3-21 (2270P)	Test no. 3-21 is not applicable for this type of system.	Non-Relevant Test, not conducted

Full Scale Crash Testing was done in compliance with MASH by the following accredited crash test laboratory (cite the laboratory's accreditation status as noted in the crash test reports.):

Laboratory Name:	Midwest Roadside Safety Facility	
Laboratory Signature:	Karla Lechtenberg DN: cn=Karla Lechtenberg, o=MwRSF, ou, email=kpolivka2@unl.edu, c=US Digitally signed by Karla Lechtenberg Date: 2020.04.17 09:59:46 -05'00'	
Address:	30 Whittier Research Center, 2200 Vine Street, Lincoln, NE 68583-0853	Same as Submitter ☐
Country:	USA	Same as Submitter ☐
Accreditation Certificate Number and Dates of current Accreditation period :	A2LA Certificate Number: 2937.01, Valid to November 30, 2019 (Currently, valid to November 30, 2021)	

Submitter Signature*:

Submit Form

ATTACHMENTS

Attach to this form:

1) Additional disclosures of related financial interest as indicated above.
2) A copy of the full test report, video, and a Test Data Summary Sheet for each test conducted in support of this request.
3) A drawing or drawings of the device(s) that conform to the Task Force-13 Drawing Specifications [Hardware Guide Drawing Standards]. For proprietary products, a single isometric line drawing is usually acceptable to illustrate the product, with detailed specifications, intended use, and contact information provided on the reverse. Additional drawings (not in TF-13 format) showing details that are relevant to understanding the dimensions and performance of the device should also be submitted to facilitate our review.

FHWA Official Business Only:

Eligibility Letter		
Number	Date	Key Words

0.000 sec 0.100 sec 0.200 sec 0.300 sec 0.400 sec

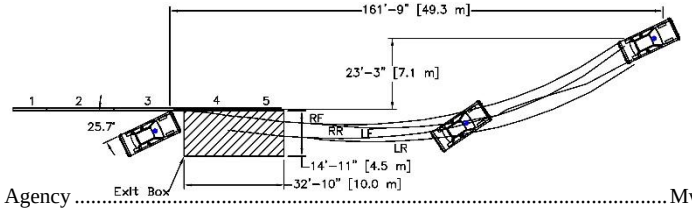

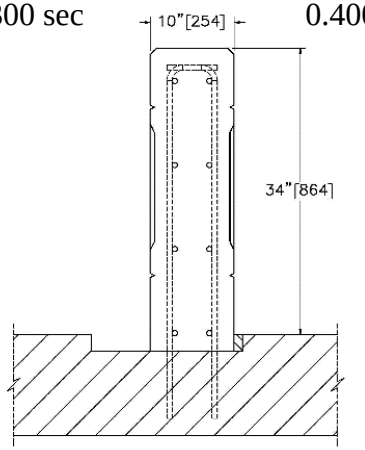

- Test Agency ..... MwRSF
- Test Number H34BR-1
- Date 4/17/2019
- MASH 2016 Test Designation No. 3-10
- Test Article ..... HDOT 34-in. Tall, Aesthetic Concrete Bridge Rail
- Total Length ..... 88 ft
- Key Component – Barrier Segment
  - Length ..... 22 ft
  - Depth ..... 10 in.
  - Height ..... 34 in.
- Key Component – Barrier Segment
  - Length ..... 11 ft
  - Depth ..... 10 in.
  - Height ..... 34 in.
- Type of Support Surface ..... Concrete Tarmac
  - Anchor ..... Vertical rebar anchored to concrete tarmac and epoxied
- Vehicle Make /Model ..... 2009 Hyundai Accent
  - Curb ..... 2,511 lb
  - Test Inertial ..... 2,430 lb
  - Gross Static ..... 2,589 lb
- Impact Conditions
  - Speed ..... 62.4 mph
  - Angle ..... 25.7 deg.
  - Impact Location ..... $42^{9}/_{16}$ in. upstream from the expansion joint, barrier nos. 3 and 4
- Impact Severity ..... 59.2 kip-ft > 51 kip-ft limit from MASH 2016
- Exit Conditions
  - Speed ..... 43.0 mph
  - Angle ..... 6.9 deg.
- Exit Box Criterion ..... Pass
- Vehicle Stability ..... Satisfactory
- Vehicle Stopping Distance ..... 161 ft – 9 in. downstream, 23 ft - 3 in. laterally behind
- Vehicle Damage ..... Moderate
  - VDS [11] 1-RFQ-4
  - CDC [12] 01-RRER-5
  - Maximum Interior Deformation ..... 3.1 in.
- Test Article Damage ..... Minimal
- Maximum Test Article Deflections
  - Permanent Set ..... 0.2 in.
  - Dynamic ..... 0.3 in.
  - Working Width ..... 10.3 in.
- Transducer Data

Evaluation Criteria		Transducer		MASH 2016 Limit
		SLICE-2 (primary)	DTS	
OIV ft/s (m/s)	Longitudinal	−23.41	−25.16	±40
	Lateral	−32.76	−29.78	±40
ORA g's	Longitudinal	−4.11	−3.76	±20.49
	Lateral	−10.63	−12.92	±20.49
MAX ANGULAR DISP. deg.	Roll	5.7	N/A	±75
	Pitch	−2.5	N/A	±75
	Yaw	−39.0	N/A	not required
THIV – ft/s		39.68	N/A	not required
PHD – g's		10.90	N/A	not required
ASI		2.54	2.39	not required

N/A – Data not available due to equipment malfunction

Figure 47. Summary of Test Results and Sequential Photographs, Test No. H34BR-1

0.000 sec 0.100 sec 0.200 sec 0.300 sec 0.400 sec

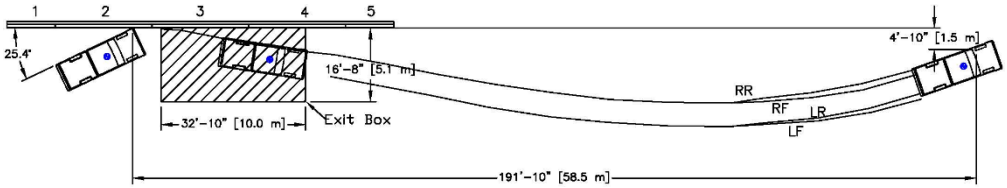

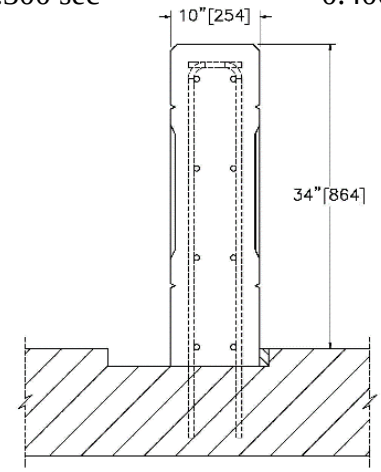

- Test Agency ..... MwRSF
- Test Number H34BR-2
- Date 4/29/2019
- MASH 2016 Test Designation No. 3-11
- Test Article ..... HDOT 34-in. Tall Aesthetic Concrete Bridge Rail
- Total Length ..... 88 ft
- Key Component – Barrier Segment
  - Length ..... 22 ft
  - Width ..... 10 in.
  - Depth ..... 34 in.
- Key Component – Barrier Segment
  - Length ..... 11 ft
  - Width ..... 10 in.
  - Depth ..... 34 in.
- Type of Support Surface ..... Concrete Tarmac
  - Anchor ..... Vertical rebar anchored to concrete tarmac and epoxied
- Vehicle Make /Model ..... 2013 Dodge Ram 1500 quad cab pickup truck
  - Curb ..... 5,068 lb
  - Test Inertial ..... 5,001 lb
  - Gross Static ..... 5,167 lb
- Impact Conditions
  - Speed ..... 64.0 mph
  - Angle ..... 25.4 deg.
  - Impact Location ..... $51^{15}/_{16}$ in. upstream from the expansion joint, barrier nos. 2 and 3
- Impact Severity ..... 126.4 kip-ft > 106 kip-ft limit from MASH 2016
- Exit Conditions
  - Speed ..... 44.0 mph
  - Angle ..... 8.9 deg.
- Exit Box Criterion ..... Pass
- Vehicle Stability ..... Satisfactory
- Vehicle Stopping Distance ..... 191 ft – 10 in. downstream, 4 ft – 10 in. laterally in front
- Vehicle Damage ..... Moderate
  - VDS [11] 1-RFQ-4
  - CDC [12] 01-RRER-5
  - Maximum Interior Deformation ..... 5.4 in.
- Test Article Damage ..... Minimal
- Maximum Test Article Deflections
  - Permanent Set ..... 0.1 in.
  - Dynamic ..... 0.2 in.
  - Working Width ..... 17.2 in.
- Transducer Data

Evaluation Criteria		Transducer		MASH 2016 Limit
		SLICE-1	SLICE-2 (primary)	
OIV ft/s	Longitudinal	−21.94	−21.83	±40
	Lateral	−24.65	−27.53	±40
ORA g's	Longitudinal	−4.00	−4.06	±20.49
	Lateral	−9.83	−7.17	±20.49
MAX ANGULAR DISP. deg.	Roll	17.0	1.37	±75
	Pitch	2.4	−2.8	±75
	Yaw	−44.6	−44.9	not required
THIV – ft/s		31.26	34.80	not required
PHD – g's		10.29	7.76	not required
ASI		1.71	1.88	not required

Figure 66. Summary of Test Results and Sequential Photographs, Test No. H34BR-2

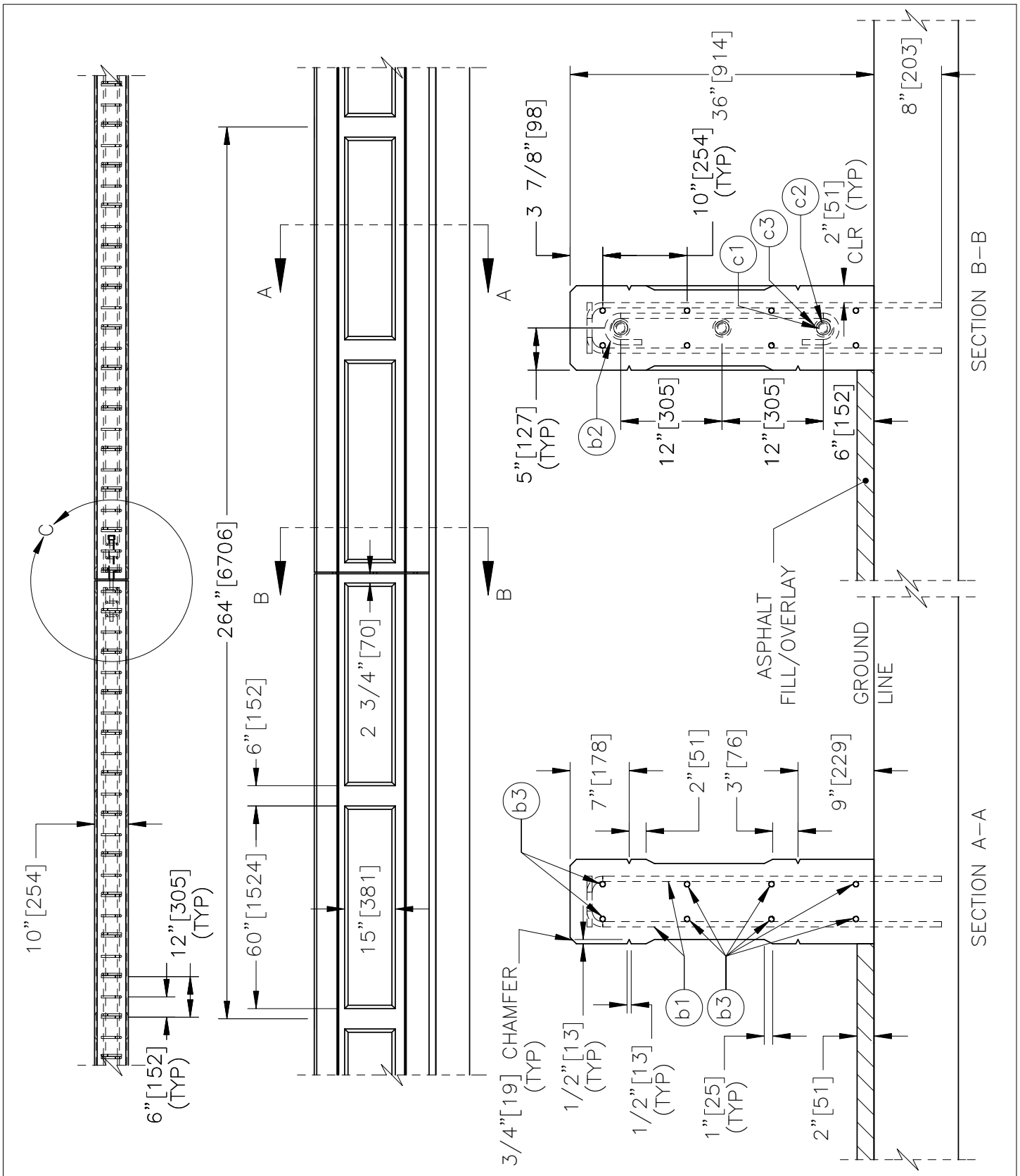

HAWAII 34" AESTHETIC CONCRETE BRIDGE RAIL

XXX##

SHEET NO.	DATE:
1 of 5	4/20/2020

INTENDED USE

The Hawaii 34” [864] Aesthetic Concrete Bridge Rail is non-proprietary concrete bridge rail that is anchored to a concrete bridge deck with a 2-in. [51] thick concrete or asphalt finishing surface applied on the traffic-side face of the bridge rail. This bridge rail has aesthetic recessed rectangular panels on the traffic-side and back-side surfaces. These aesthetic recessed panels measure 60 in. [1524] wide, 15 in. [381] tall, and ½ [13] in. deep with an inclination angle of 45 degrees. Expansion joints using smooth dowels are typically located at 22-ft [6706] intervals in the bridge rail. End sections measuring 3 ft – 6 in. [1067] long are placed at the end of the bridge rail adjacent to an end buttress structure and should have similar or greater capacity as the bridge rail. The concrete used for the Hawaii 34” [864] Bridge rail should have a minimum nominal compressive strength of 4,000 psi [27.6 MPa]. The Hawaii 34” [864] Aesthetic Concrete Bridge Rail should be used in location where a maximum dynamic deflection of 0.3 in. [8] at the top of the barrier or less is acceptable and where a working width of 17.2 in. [438 mm] is provided. The Hawaii 34” [864] Aesthetic Concrete Bridge Rail should be used with the Modified Hawaii Thrie Beam Approach Guardrail Transition when transitioning to 31” [787] tall strong-post, W-beam guardrail such as Midwest Guardrail System (SGR20). The Hawaii 34” [864] Aesthetic Concrete Bridge Rail has been crash tested under Test Level 3 (TL-3) conditions and deemed crashworthy according to the Manual for Assessing Safety Hardware, Second Edition (MASH 2016) performance criteria.

COMPONENTS

Unit Length = 264” [6706]

DESIGNATOR	COMPONENT	NUMBER
c1	1” [25] Dia. Smooth 24” [610] Long Rebar	3
c2	1 1/4" [32] Dia. PVC Pipe	3
c3	1 1/4” [32] PVC Cap	3
---	Concrete, Minimum 4,000 psi f’c	-
---	See Bill of Bars	-

ELIGIBILITY

Eligibility will be pursued.

REFERENCES

Bielenberg, R. W., Yoo, S., Faller, R. K., and Urbank, E. L., *Crash Testing and Evaluation of the HDOT 34-in. Tall Aesthetic Concrete Bridge Rail: MASH Test Designation Nos. 3-10 and 3-11*, Report to Hawaii Department of Transportation, Transportation Report No. TRP-03-420-19, Midwest Roadside Safety Facility, University of Nebraska-Lincoln, October 2019.

CONTACT INFORMATION

Hawaii Department of Transportation
Aliiaimoku Building
869 Punchbowl St.
Honolulu, HI 96813

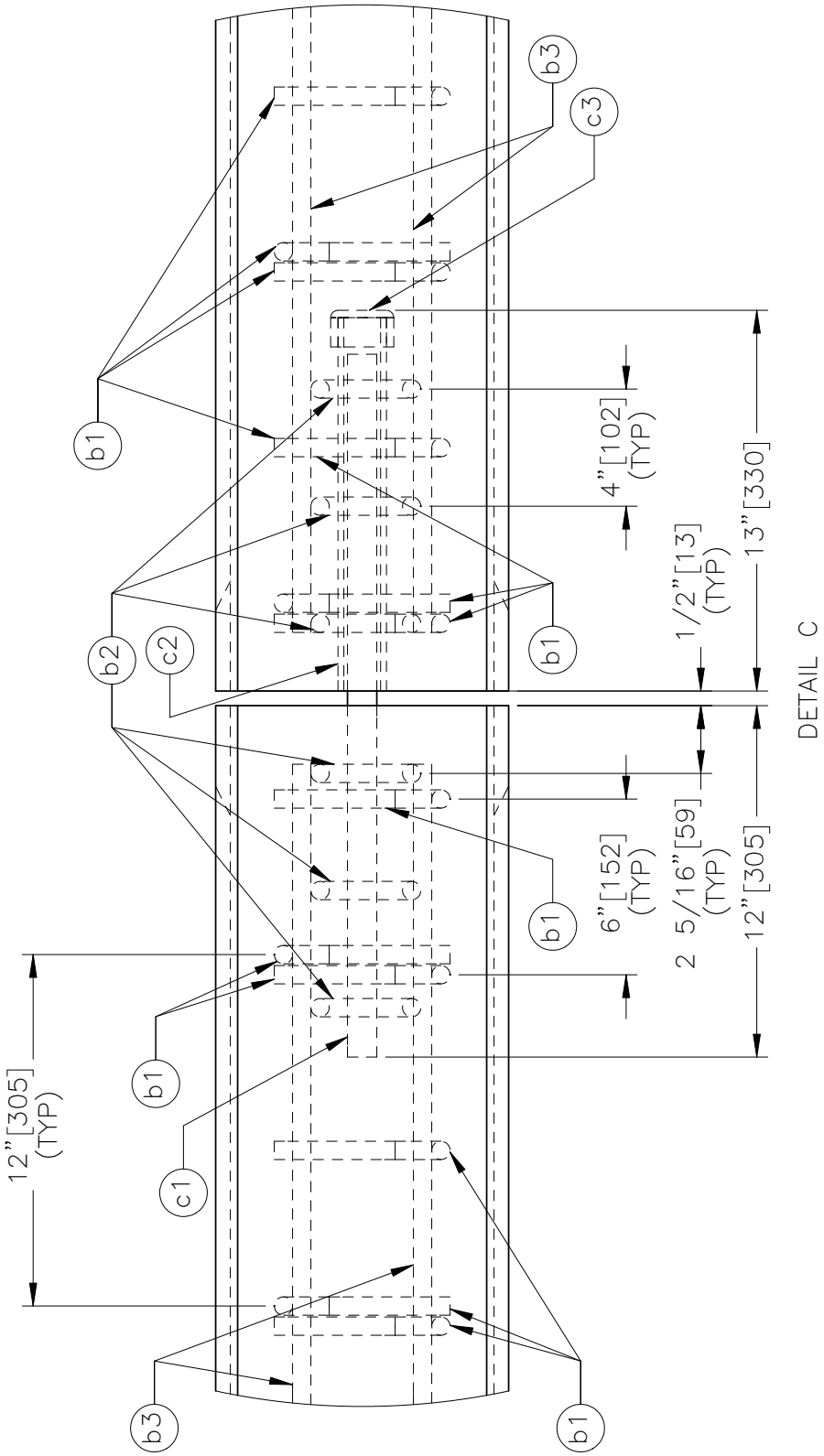

NOTE: SMOOTH DOWELS ARE CAST IN PLACE ON ONE SIDE OF THE EXPANSION JOINT, AND INSERTED INTO PLASTIC SLEEVES, WHICH ARE CAST INTO THE BARRIER ON THE OTHER SIDE OF THE EXPANSION JOINT.

HAWAII 34" AESTHETIC CONCRETE BRIDGE RAIL

XXX##

SHEET NO.	DATE:
3 of 5	4/20/2020

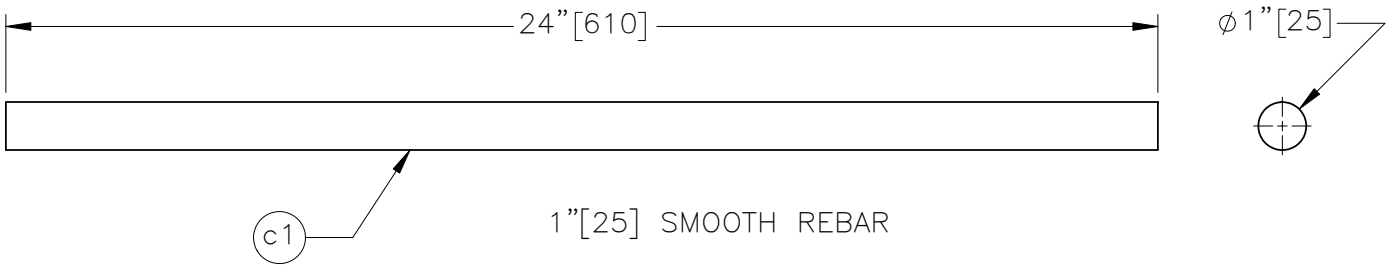

1"[25] SMOOTH REBAR

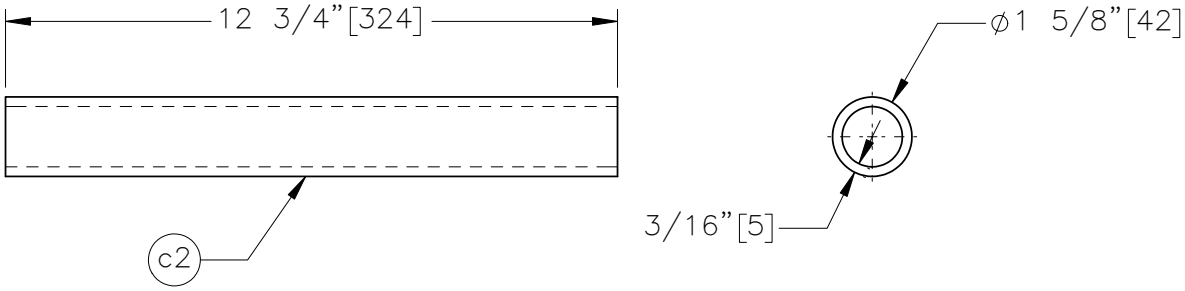

1 1/4"[32] DIA. PVC PIPE

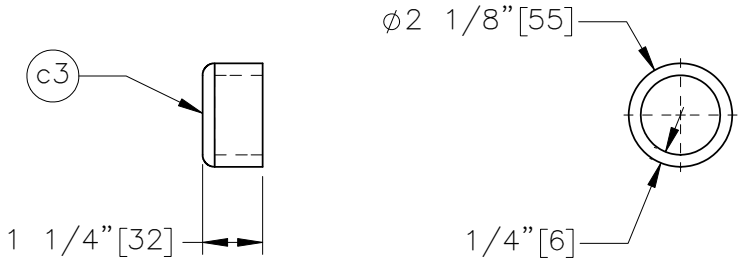

1 1/4"[32] PVC CAP

HAWAII 34" AESTHETIC CONCRETE BRIDGE RAIL

XXX##	
SHEET NO.	DATE:
4 of 5	4/20/2020

BILL OF BARS				
Part No.	Bar No.	No.	Unbent Length	Material
b1	#5	68	46 3/4" [1187]	ASTM A615 Gr. 60
b2	#5	6	38 7/8" [987]	ASTM A615 Gr. 60
b3	#5	8	259 1/2" [6591]	ASTM A615 Gr. 60

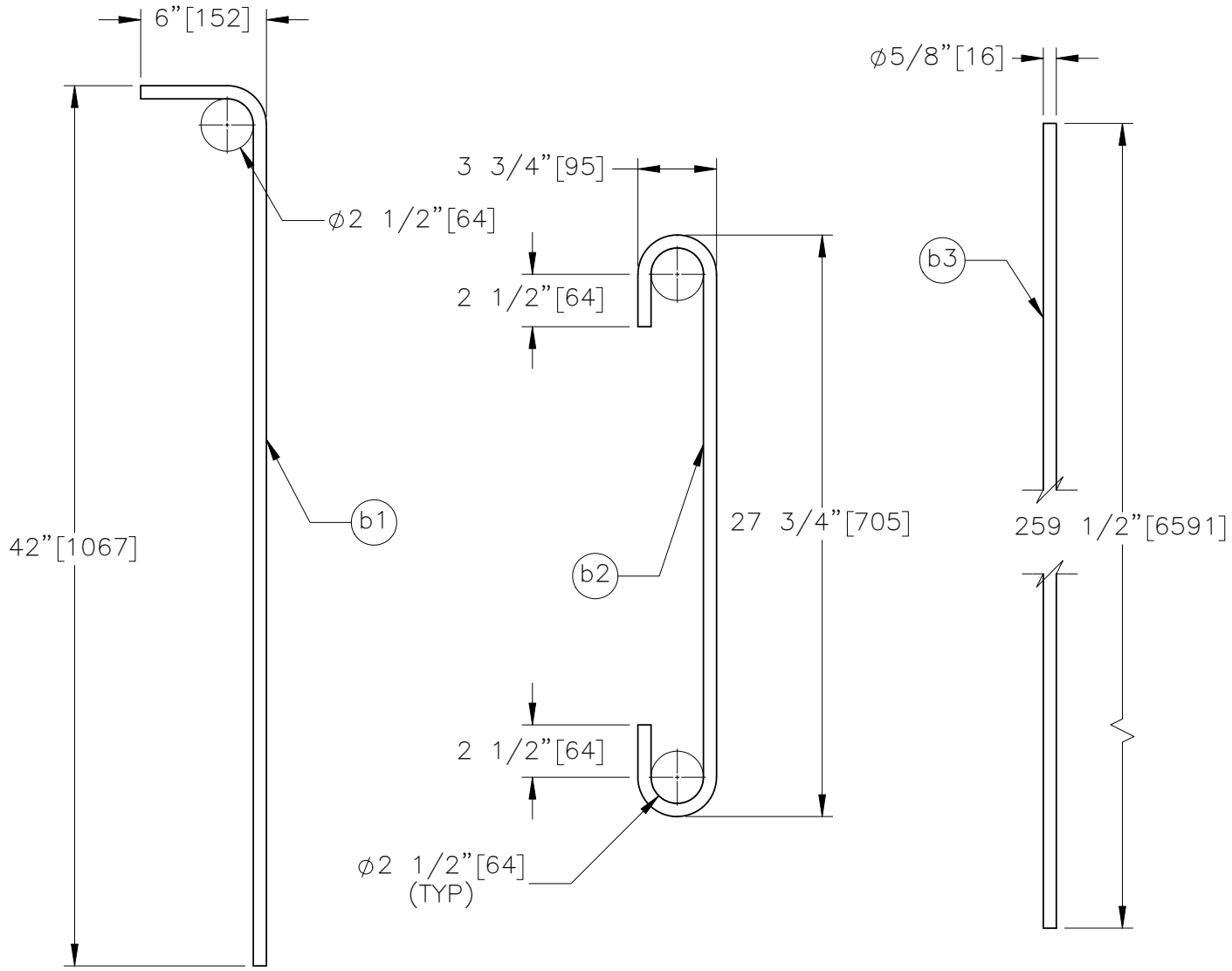

HAWAII 34" AESTHETIC CONCRETE BRIDGE RAIL

XXX##

SHEET NO.	DATE:
5 of 5	4/20/2020