U.S. Department of Transportation
Federal Highway Administration

June 3, 2020

1200 New Jersey Ave., SE
Washington, D.C. 20590

In Reply Refer To:
HSST-1/ B-294A

Stephan Flapper
Laura Metaal Road Safety
Rimburgerweg 40, 647 XX Kerkrade
Netherlands

Dear Mr. Flapper:

This letter is in response to your May 13, 2020 request for the Federal Highway Administration (FHWA) to review a roadside safety device, hardware, or system for eligibility for reimbursement under the Federal-aid highway program. This letter supersedes the original letter B-294 for the SafeZone MASH TL-4 Limited Deflection Barrier. This FHWA letter of eligibility is assigned FHWA control number B-294A and is valid until a subsequent letter is issued by FHWA that expressly references this device.

Decision

The following devices are eligible, with details provided in the form which is attached as an integral part of this letter:

- SafeZone MASH TL-4 Limited Deflection

Scope of this Letter

To be found eligible for Federal-aid funding, new roadside safety devices should meet the crash test and evaluation criteria contained in the American Association of State Highway and Transportation Officials'(AASHTO) Manual for Assessing Safety Hardware (MASH). However, the FHWA, the Department of Transportation, and the United States Government do not regulate the manufacture of roadside safety devices. Eligibility for reimbursement under the Federal-aid highway program does not establish approval, certification or endorsement of the device for any particular purpose or use.

This letter is not a determination by the FHWA, the Department of Transportation, or the United States Government that a vehicle crash involving the device will result in any particular outcome, nor is it a guarantee of the in-service performance of this device. Proper manufacturing, installation, and maintenance are required in order for this device to function as tested.

This finding of eligibility is limited to the crashworthiness of the system and does not cover other structural features, nor conformity with the Manual on Uniform Traffic Control Devices.

Eligibility for Reimbursement

Based solely on a review of crash test results and certifications submitted by the manufacturer, and the crash test laboratory, FHWA agrees that the device described herein meets the crash test and evaluation criteria of the American Association of State Highway and Transportation Officials' Manual for Assessing Safety Hardware (MASH). Therefore, the device is eligible for reimbursement under the Federal-aid highway program if installed under the range of tested conditions.

Name of system: SafeZone MASH TL-4 Limited Deflection
Type of system: Rigid/Semi-Rigid Barriers
Test Level: MASH Test Level 4
Testing conducted by: Crashtest-service.com GmbH
Date of request: May 13, 2020

FHWA concurs with the recommendation of the accredited crash testing laboratory as stated within the attached form.

Full Description of the Eligible Device

The device and supporting documentation, including reports of the crash tests or other testing done, videos of any crash testing, and/or drawings of the device, are described in the attached form.

Notice

This eligibility letter is issued for the subject device as tested. Modifications made to the device are not covered by this letter and will need to be tested in accordance with all recommended tests in AASHTO's MASH as part of a new and separate submittal.

You are expected to supply potential users with sufficient information on design, installation and maintenance requirements to ensure proper performance.

You are expected to certify to potential users that the hardware furnished has the same chemistry, mechanical properties, and geometry as that submitted for review, and that it will meet the test and evaluation criteria of AASHTO's MASH.

Issuance of this letter does not convey property rights of any sort or any exclusive privilege. This letter is based on the premise that information and reports submitted by you are accurate and correct. We reserve the right to modify or revoke this letter if: (1) there are any inaccuracies in the information submitted in support of your request for this letter, (2) the qualification testing was flawed, (3) in-service performance or other information reveals safety problems, (4) the

system is significantly different from the version that was crash tested, or (5) any other information indicates that the letter was issued in error or otherwise does not reflect full and complete information about the crashworthiness of the system.

Standard Provisions

- To prevent misunderstanding by others, this letter of eligibility designated as FHWA control number B-294A shall not be reproduced except in full. This letter and the test documentation upon which it is based are public information. All such letters and documentation may be reviewed upon request.

- This letter shall not be construed as authorization or consent by the FHWA to use, manufacture, or sell any patented system for which the applicant is not the patent holder.

Sincerely,

Michael S. Griffith

Michael Griffith
Director, Office of Safety Technologies
Office of Safety

Enclosures

Request for Federal Aid Reimbursement Eligibility of Highway Safety Hardware

Submitter	Date of Request:	April 29, 2020	○ New ◉ Resubmission
	Name:	Stephan Flapper	
	Company:	Laura Metaal Road Safety	
	Address:	Rimburgerweg 40, 6471 XX Kerkrade	
	Country:	The Netherlands	
	To:	Michael S. Griffith, Director FHWA, Office of Safety Technologies	

I request the following devices be considered eligible for reimbursement under the Federal-aid highway program.

Device & Testing Criterion - Enter from right to left starting with Test L ! - ! - !

System Type	Submission Type	Device Name / Variant	Testing Criterion	Test Level
'B':Rigid/Semi-Rigid Barriers	◉ Physical Crash Testing ○ Engineering Analysis	SafeZone MASH TL-4 Limited Deflection	AASHTO MASH	TL4

By submitting this request for review and evaluation by the Federal Highway Administration, I certify that the product(s) was (were) tested in conformity with the AASHTO Manual for Assessing Safety Hardware and that the evaluation results meet the appropriate evaluation criteria in the MASH.

Individual or Organization responsible for the product:

Contact Name:	Stephan Flapper	Same asSubmitter☒
Company Name:	Laura Metaal Road Safety	Same asSubmitter☒
Address:	Rimburgerweg 40, 6471 XX Kerkrade	Same asSubmitter☒
Country:	The Netherlands	Same asSubmitter☒
Enter below all disclosures of financial interests as required by the FHWA `Federal-Aid Reimbursement Eligibility Process for Safety Hardware Devices' document.		
With respect to Laura Metaal Road Safety, Crashtest-service.com GmbH does not hold any financial interests. Laura Metaal Road Safety contracted Crashtest-service.com GmbH for the services of crash testing our product SafeZone according to specifications of AASHTO Manual for Assessing Safety Hardware (MASH) Tests 4-10, 4-11 and 4-12. Crashtest-service.com GmbH was compensated for the cost of the crash tests. No consulting relationship, research funding or other forms of research support, patents, copyrights, other intellectual property interests, licenses, contractual relationships, business ownership or investments interestsare retained for Crashtest-service.com GmbH		

PRODUCT DESCRIPTION

Help

(●) New Hardware or Significant Modification ( ) Modification to Existing Hardware

SafeZone system isa proprietary modular high containment and low deflection steel barrier developed by Laura Metaal Road Safety. It is designed for both permanent and temporary use in construction and roadwork applications. The system is typically deployed in 5.8 m (19') standard sections that can quickly be connected together to form the desired total length of barrier wall.
Joining of the sections is done by linking them together and applying one security bolt per section to keep the sections securely fastened. If desired, two or three sections can remain connected permanently to form 11.6 m (38') or 17.4 m (54') combined sections for quicker placement on the road.

SafeZone is 0.81 m (32") high and 0.45 m (18") wide without anchor units or 0.64 m (25") with anchor units. The weight isapproximately 93 kg/m or 62lbs/ft. For the MASH TL-4 Limited Deflection setup, 7 standard sections were lined up on asphalt, forming a 40.6 m (133 ft) string. The anchor positions used were the two outer positions, the second position on element one and the second position on every second element thereafter. Threaded rods 0.30 m (11.8") long and 0.030 m (1.18") diameter were used. All anchors were epoxied in asphalt. The dynamic deflection of the MASH TL4-12 test was 0.85 m (33.5") and the permanent deflection was 0.45 m (17.7"). The dynamic working width was 2.17 m (85.4") and the permanent working width was 0.88 m (34.6").

CRASH TESTING

By signature below, the Engineer affiliated with the testing laboratory, agrees in support of this submission that all of the critical and relevant crash tests for this device listed above were conducted to meet the MASH test criteria. The Engineer has determined that no other crash testsare necessary to determine the device meets the MASH criteria.

Engineer Name:	Peter Schimmelpfennig	
Engineer Signature:	Peter Schimmelpfennig Digital unterschrieben von Peter Schimmelpfennig Datum: 2020.05.08 15:06:55 +02'00'	
Address:	Amelunxenstraße 30, 48167 Münster	Same as Submitter ☐
Country:	Germany	Same as Submitter ☐

A brief description of each crash test and its result:

Help

Required Test Number	Narrative Description	Evaluation Results
4-10 (1100C)	Test nr. 18648-2. Test report nr. 11775-2887/18648-2 performed 20 April 2017 by Crashtest-Service.com. The 32" high longitudinal barrier contained and redirected the 1100C vehicle. The vehicle did not penetrate, underride or override the installation. Maximum dynamic deflection during the test was 13.8". No significant partsseparated from either vehicle or barrier. No occupant compartment deformation or intrusion occurred. The vehicle remained upright during and after the impact.	PASS

Required Test Number	Narrative Description	Evaluation Results
4-11 (2270P)	Test nr. 18933. Test report nr. 11717-3157/18933 performed 23 May 2018 by Crashtest-service.com The 32” high longitudinal barrier contained and redirected the 2270P vehicle. The vehicle did not penetrate, underride or override the installation. Maximum dynamic deflection during the test was 23.8”. No significant partsseparated from either vehicle or barrier. No occupant compartment deformation or intrusion occurred. The vehicle remained upright during and after the impact.	PASS
4-12 (10000S)	Test nr. 19154 Test report nr. 11717-3401-19154 performed 16 April 2019 by Crasthtest-service.com. The 32” high longitudinal barrier contained and redirected the 10000S vehicle. The vehicle did not penetrate, underride or override the installation. Maximum dynamic deflection during the test was 33.5”. No significant partsseparated from either vehicle or barrier during impact. No occupant compartment deformation or intrusion occurred. The vehicle remained upright during and after the impact.	PASS
4-20 (1100C)	Device isstand alone. 4-20 now not relevant	Non-Relevant Test, not conducted
4-21 (2270P)	Device isstand alone. 4-20 now not relevant	Non-Relevant Test, not conducted
4-22 (10000S)	Device isstand alone. 4-20 now not relevant	Non-Relevant Test, not conducted

Full Scale Crash Testing was done in compliance with MASH by the following accredited crash test laboratory (cite the laboratory’s accreditation status as noted in the crash test reports.):

Laboratory Name:	Crashtest-service.com GmbH	
Laboratory Signature:	Peter Schimmelpfennig Digital unterschrieben von Peter Schimmelpfennig Datum: 2020.05.08 15:07:10 +02'00'	
Address:	Amelunxenstraße 30, 48167 Münster	Same as Submitter ☐
Country:	Germany	Same as Submitter ☐
Accreditation Certificate Number and Dates of current Accreditation period :	D-PL-17359-01-00 07.05.2013 - 06.05.2018	

Submitter Signature*: Stephan Flapper Digitaal ondertekend door Stephan Flapper Datum: 2020.05.11 15:09:40 +02'00'

Submit Form

ATTACHMENTS

Attach to this form:

1) Additional disclosures of related financial interest as indicated above.
2) A copy of the full test report, video, and a Test Data Summary Sheet for each test conducted in support of this request.
3) A drawing or drawings of the device(s) that conform to the Task Force-13 Drawing Specifications [Hardware Guide Drawing Standards]. For proprietary products, a single isometric line drawing is usually acceptable to illustrate the product, with detailed specifications, intended use, and contact information provided on the reverse. Additional drawings (not in TF-13 format) showing details that are relevant to understanding the dimensions and performance of the device should also be submitted to facilitate our review.

FHWA Official Business Only:

Eligibility Letter		
Number	Date	Key Words

1. Sequential Photographs

0.000 s	0.077 s	0.153 s	0.240 s	0.317 s

2. Plan View

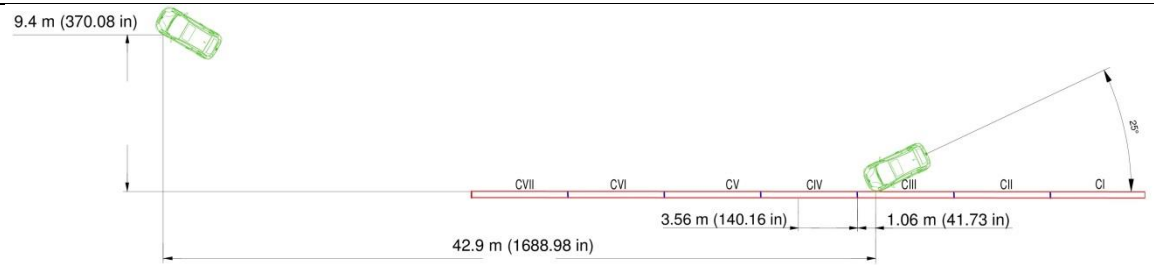

3. Cross-Sectional View

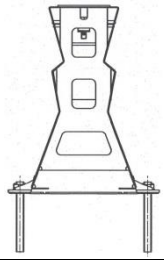

4. General Information		
Test Agency	crashtest-service.com GmbH (CTS)	
Test Standard	MASH Test TL4-10	
CTS-Test No.	18648	
Date	April 20, 2017	
5. Test Article		
Type	Barrier	
Name	SafeZone	
Installation Length	40.62 m (1599.2 in)	
Key Elements - Barrier	Length: 5.80 m (228.3 in) Base Width: 0.45 m (17.7 in) Height: 0.81 m (31.9 in)	
6. Soil Type and Condition		
Type of Soil	Asphalt	
Soil strenght	/	
Condition	sunny, dry, 15.2° C (59.36° F)	
7. Test Vehicle		
Type/Designation	1100C	
Make and Model	2014 KIA Rio	
Curb	1140	kg (2513 lb)
Test Inertial	1123	kg (2476 lb)
Dummy	75	kg (165 lb)
Gross Static	1198	kg (2641 lb)

8. Impact Conditions		
Speed	102.1	km/h (63.4 mph)
Angle	25	degrees
Location/Orientation	1.06	m (41.7 in) before transition of elements III & IV
9. Exit Conditions		
Speed	84	km/h (52 mph)
Angle	12	degrees
10. Post-Impact Trajectory		
Vehicle Stability	Satisfactory	
Stopping Distance	42.90	m (1689 in) downstream
	9.40	m (370 in) laterally in front
Vehicle Snagging	None	
Vehicle Pocketing	None	
11. Occupant Risk		
Impact Velocity		
Longitudinal	4.72	m/s (15.49 ft/s)
Lateral	7.22	m/s (23.69 ft/s)
Ridedown Accelerations (10 msec avg.)		
Longitudinal	-5.37	g
Lateral	-14.73	g

THIV	9	m/s (30 ft/s)
PHD	18.33	g
ASI	1.3	
12. Test Article Damage		
Classification	Moderate	
particularities	None	
13. Test Article Deflections		
Dynamic Deflection	0.35	m (13.8 in)
Permanent Deflection	0.24	m (9.4 in)
Dynamic Working Width	0.89	m (35.0 in)
Permanent Working Width	0.68	m (26.8 in)
14. Vehicle Damage		
Calssification	Moderate	
VDS	11LFQ3	
CDC	11FDEW3	
Max. Exterior Deformation	74 mm (2.91 in)	
Max. Interior Deformation	68 mm (2.68 in)	
OCDI	LF0000011	

Summary of Crash Test Results

1. Sequential Photographs

0.000 s	0.076 s	0.150 s	0.223 s	0.300 s

2. Plan View

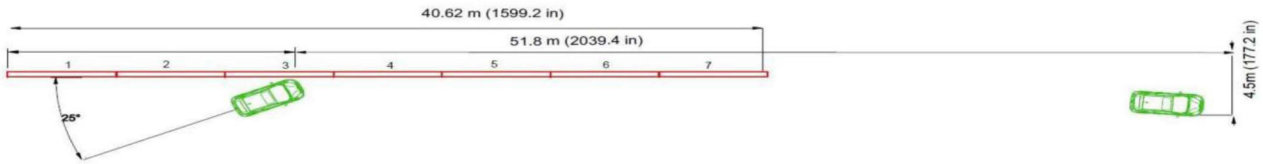

3. Cross-Sectional View

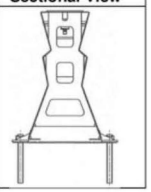

4. General Information		
Test Agency	crashtest-service.com GmbH (CTS)	
Test Standard	MASH Test TL 4-11	
CTS-Test No	18933	
Date	May 23, 2018	
5. Test Article		
Type	Barrier	
Name	H51 barrier	
Installation Length	40.62 m (1599.2 in)	
Key Elements - Barrier	Length: 5.80 m (228.3 in) Base Width: 0.45 m (17.7 in) Height: 0.81 m (31.9 in)	
6. Soil Type and Condition		
Type of Soil	Asphalt	
Soil Strength	/	
Condition	Dry, sunny, 26.8° C (80,2° F)	
7. Test Vehicle		
Type/Designation	2270P	
Make and Model	2013 Dodge Ram 1500 Pickup	
Curb	2242	kg (4942 lb)
Test Inertial	2280	kg (5027 lb)
Dummy	/	kg (lb)
Gross Static	2280	kg (5027 lb)

8. Impact Conditions		
Speed	98.3	km/h (61,1 mph)
Angle	25	degrees
Location/Orientation	1,56	m (5,12 ft) before transition of elements 3 & 4
9. Exit Conditions		
Speed	80.4	km/h (49.99 mph)
Angle	6	degrees
10. Post-Impact Trajectory		
Vehicle Stability	Satisfactory	
Stopping Distance	51.8	m (170 ft) downstream
	4.5	m (14,8 ft) laterally in front
Vehicle Snagging	None	
Vehicle Pocketing	None	
11. Occupant Risk		
Impact Velocity		
Longitudinal	3.47	m/s (11,4 ft/s)
Lateral	5.78	m/s (19 ft/s)
Ridedown Accelerations (10 msec avg.)		
Longitudinal	-3.59	g
Lateral	8.29	g

THIV	6.2	m/s (20,3 ft/s)
PHD	10.98	g
ASI	0.84	
12. Test Article Damage		
Classification	Moderate	
Particularities	None	
13. Test Article Deflections		
Dynamic Deflection	0.605	m (23.8 in)
Permanent Deflection	0.250	m (9.8 in)
Dynamic Working Width	1.062	m (41.8 in)
Permanent Working Width	0.650	m (25.6 in)
14. Vehicle Damage		
Classification	Moderate	
VDS	11-LFQ-3	
CDC	11FDEW3	
Max. Exterior Deformation	174 mm (6.9 in)	
Max. Interior Deformation	48 mm (1,89 in)	
OCDI	LF0000000	

Summary of Crash Test Results

1. Sequential Photographs

0.000 s	0.200 s	0.400 s	0.600 s	0.800 s

2. Plan View

3. Cross-Sectional View

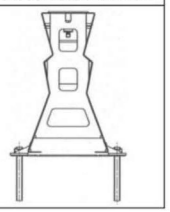

4. General Information		
Test Agency	crashtest-service.com GmbH (CTS)	
Test Standard	MASH Test TL 4-12	
CTS-Test No.	19154	
Date	16-Apr-2019	
5. Test Article		
Type	Barrier	
Name	SafeZone	
Installation Length	40.62 m (1599.2 in)	
Key Elements - Barrier	Length: 5.80 m (228.3 in) Base Width: 0.45 m (17.7 in) Height: 0.81 m (31.9 in)	
6. Soil Type and Condition		
Type of Soil	Asphalt	
Soil strenght	/	
Condition	cloudy, dry	
7. Test Vehicle		
Type/Designation	10000S	
Make and Model	2007 Freightliner M2	
Curb	8342	kg (18391 lb)
Test Inertial	9706	kg (21398 lb)
Dummy	/	kg (lb)
Gross Static	9706	kg (21398 lb)

8. Impact Conditions		
Speed	92.0	km/h (57.2 mph)
Angle	15	degrees
Location/Orientation	1.75	m (68.9 in) before transition of barriers 3/4
9. Exit Conditions		
Speed	70.8	km/h (44 mph)
Angle	not obtainable	degrees
10. Post-Impact Trajectory		
Vehicle Stability	Satisfactory	
Stopping Distance	66.1	m (2602 in) downstream
	8.2	m (323 in) laterally in front
Vehicle Snagging	None	
Vehicle Pocketing	None	
11. Occupant Risk		
Impact Velocity		
Longitudinal	N/A	m/s (ft/s)
Lateral	N/A	m/s (ft/s)
Ridedown Accelerations (10 msec avg.)		
Longitudinal	N/A	g
Lateral	N/A	g

THIV	N/A	m/s
PHD	N/A	g
ASI	N/A	
12. Test Article Damage		
Classification	Moderate	
particularities	None	
13. Test Article Deflections		
Dynamic Deflection	0.85	m (33.5 in)
Permanent Deflection	0.45	m (17.7 in)
Dynamic Working Width	2.17	m (85.43 in)
Permanent Working Width	0.88	m (34.6 in)
14. Vehicle Damage		
Calssification	Moderate	
VDS	11-LFQ-5	
CDC	11FFLW3	
Max. Exterior Deformation	N/A	
Max. Interior Deformation	N/A	
OCDI	N/A	

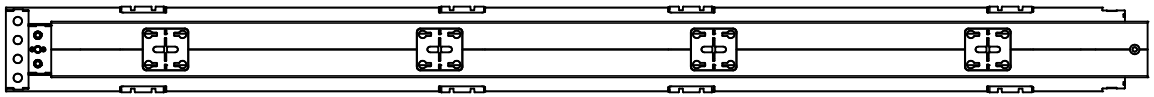

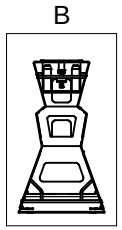

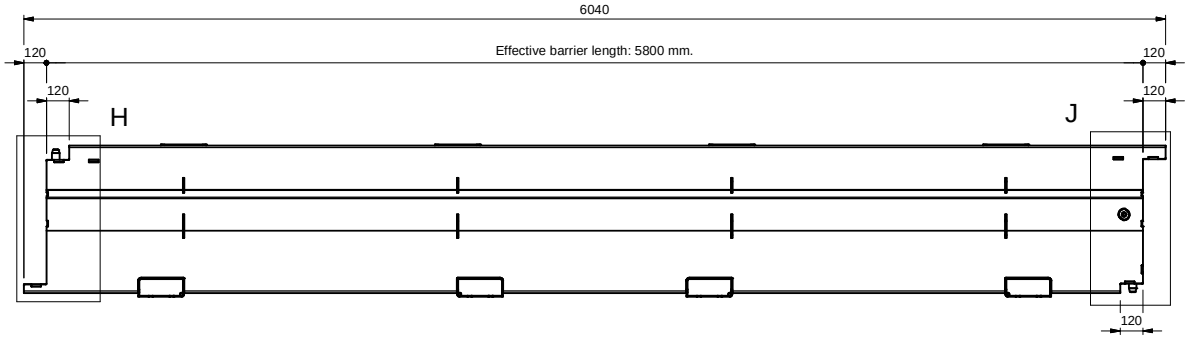

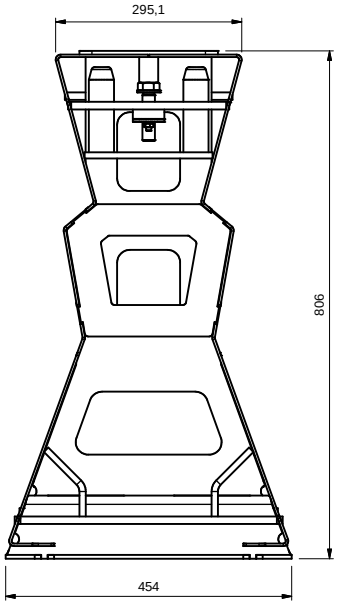

B

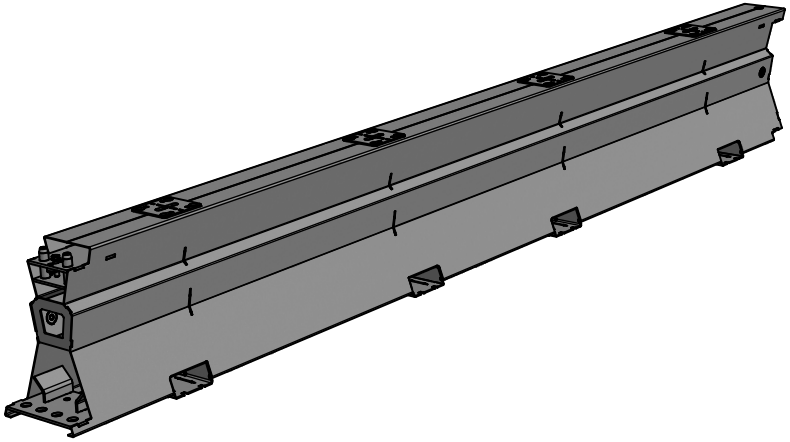

H (1 : 8)

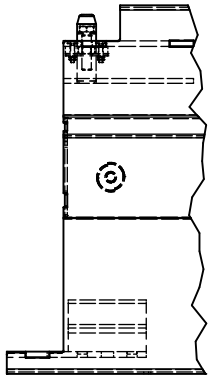

J (1 : 8)

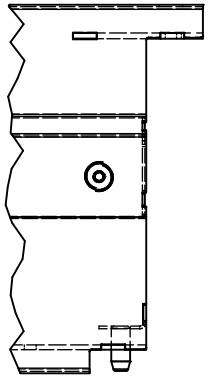

LAURA METAAL ROAD SAFETY	Materiaal:	Algemene maattoleranties	Toleranties lasconstructie	Lassen	Thermisch snijden
	Massa: 498,82 kg	NEN-ISO 2768-c	NEN-EN-ISO 13920-C	NEN-EN-ISO 5817-D	NEN-EN-ISO 9013-542
	Amerikaanse projectie:	Artikelnummer: AS31840000			Revisie:
Tekenaar: ramaekers	Getekend: 15-3-2017	Maateenheid: mm	Titel: SafeZone; barrier compleet		Schaal:
Controle:	Gecontroleerd:				
Opmerking:			Omschrijving: Montagesamenstelling compleet		Formaat: A2

LAURA METAAL EYGELSHOVEN BV , Rimburgerweg 40, NL-6471 XX Kerkrade, tel: +31 (0)45 - 546 88 88 , www.laurametaal.nl

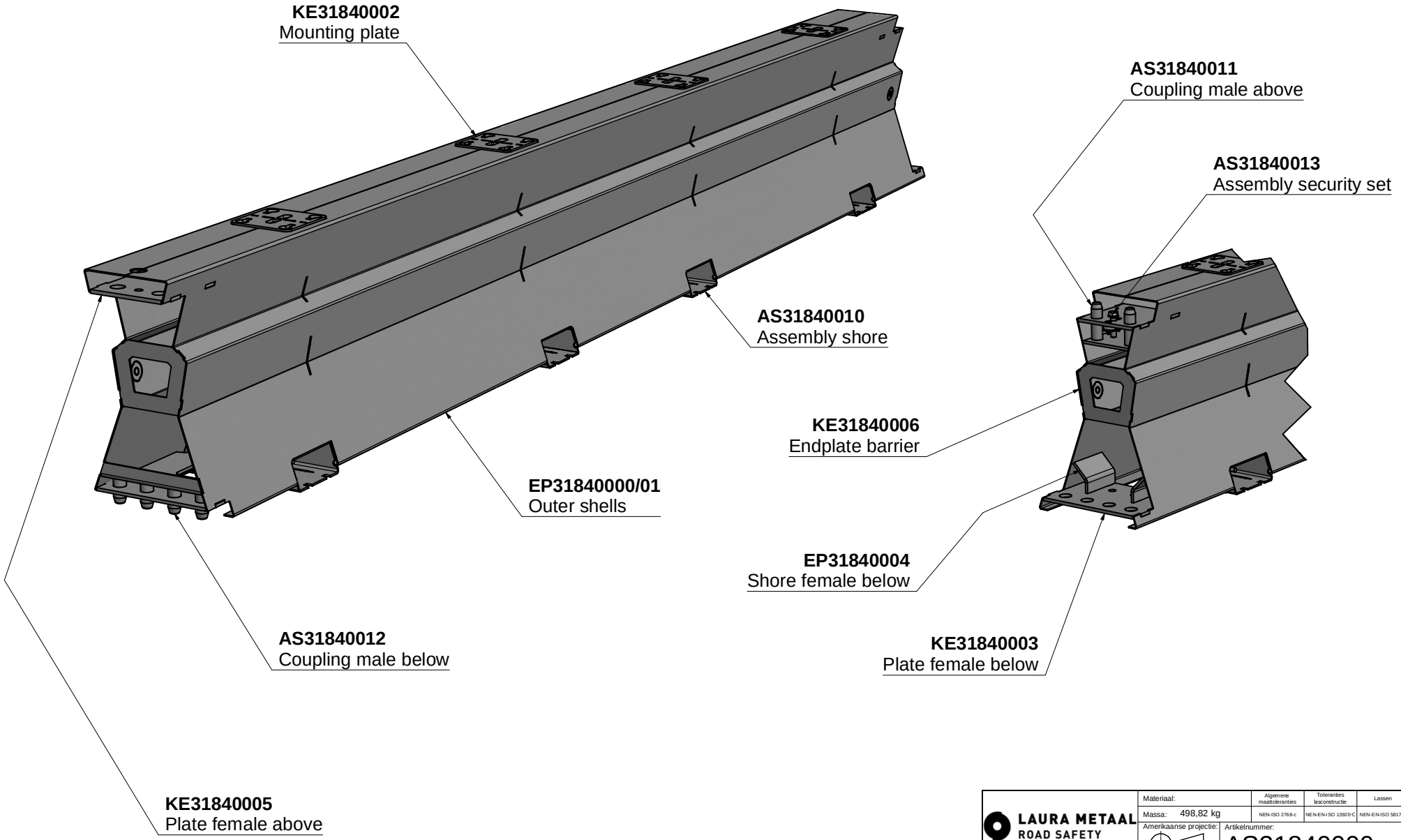

LAURA METAAL ROAD SAFETY	Materiaal:		Algemene maattoleranties	Toleranties lasconstructie	Lassen	Thermisch snijden
	Massa: 498,82 kg		NEN-ISO 2768-c	NEN-EN-ISO 13920-C	NEN-EN-ISO 5817-D	NEN-EN-ISO 9013-542
	Amerikaanse projectie:		Artikelnummer: AS31840000			Revisie:
Tekenaar: ramaekersn	Getekend: 15-3-2017	Maateenheid: mm	Titel: SafeZone; barrier compleet			Schaal:
Controle:	Gecontroleerd:					
Opmerking:			Omschrijving: Montagesamenstelling compleet			Formaat: A2

LAURA METAAL EYGELSHOVEN BV , Rimburgerweg 40, NL-6471 XX Kerkrade, tel: +31 (0)45 - 546 88 88 , www.laurametaal.nl

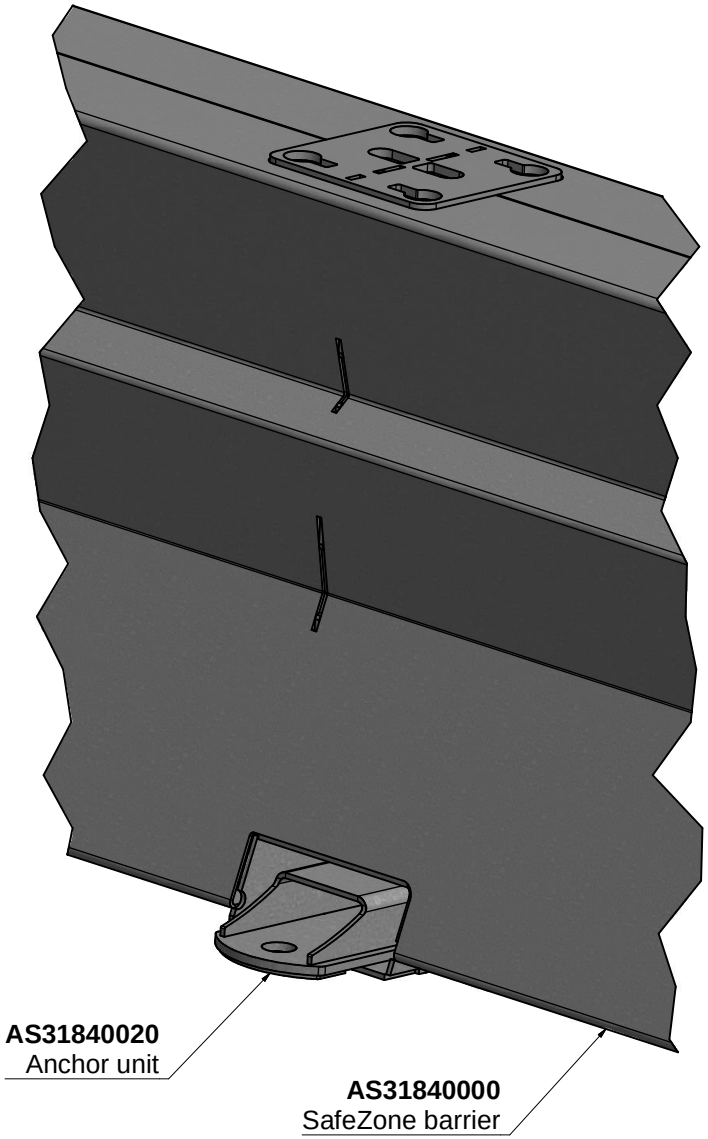

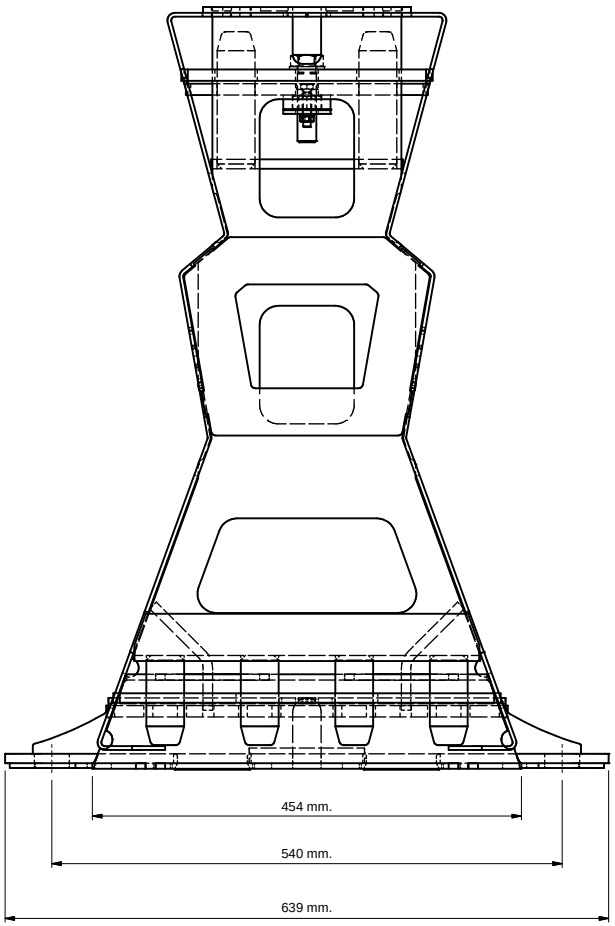

LAURA METAAL ROAD SAFETY	Materiaal:	Algemene maattoleranties	Toleranties lasconstructie	Lassen	Thermisch snijden
	Massa: N/A	NEN-ISO 2768-c	NEN-EN-I SO 13920-C	NEN-EN-ISO 5817-D	NEN-EN-ISO 9013-542
	Amerikaanse projectie:	Artikelnummer: AS31840000+20			Revisie:
Tekenaar: ramaekers	Getekend: 15-3-2017	Maateenheid: mm	Titel: SafeZone		Schaal:
Controle:	Gecontroleerd:				
Opmerking:			Omschrijving: Including anchor unit		Formaat: A2

LAURA METAAL EYGELSHOVEN BV , Rimburgerweg 40, NL-6471 XX Kerkrade, tel: +31 (0)45 - 546 88 88 , www.laurametaal.nl

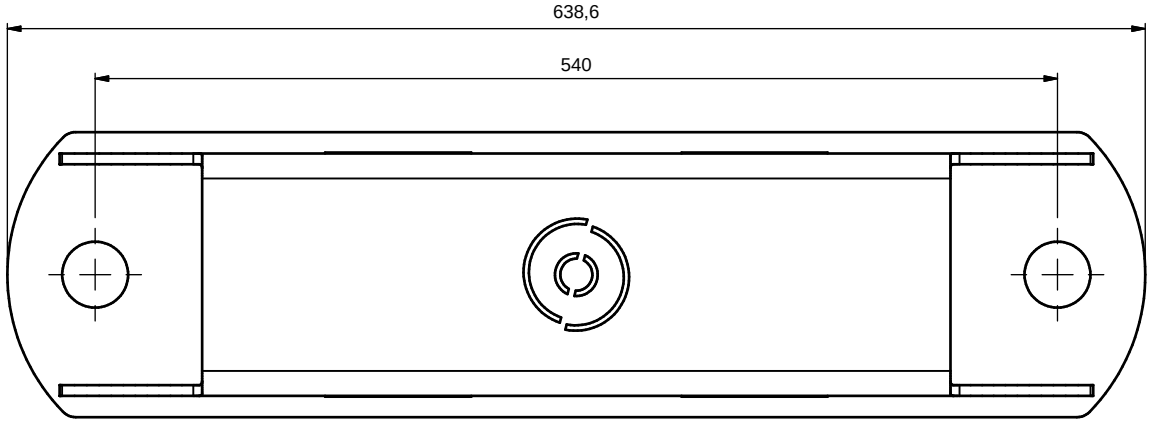

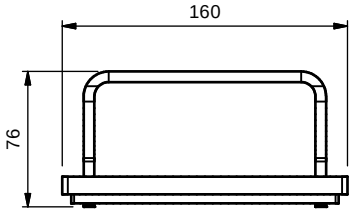

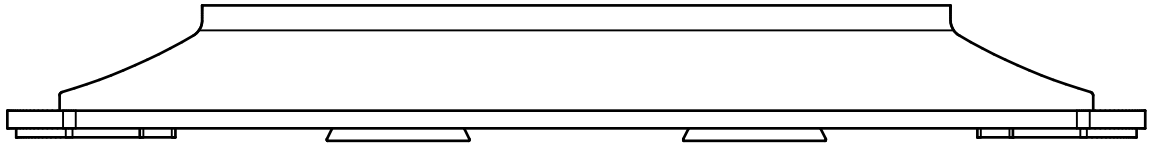

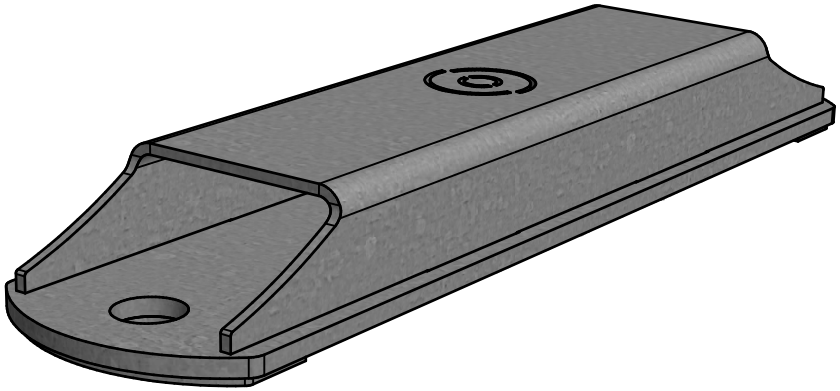

LAURA METAAL ROAD SAFETY	Materiaal:	Algemene maattoleranties	Toleranties lasconstructie	Lassen	Thermisch snijden
	Massa: 13,24 kg	NEN-ISO 2768-c	NEN-EN-ISO 13920-C	NEN-EN-ISO 5817-D	NEN-EN-ISO 9013-542
	Amerikaanse projectie:	Artikelnummer: AS31840020			Revisie:
Tekenaar: ramaekersn	Getekend: 15-3-2017	Maateenheid: mm	Titel: Safezone; standaard insert		Schaal:
Controle:	Gecontroleerd:				
Opmerking:			Omschrijving: Lassamenstelling		Formaat: A3

LAURA METAAL EYGELSHOVEN BV , Rimburgerweg 40, NL-6471 XX Kerkrade, tel: +31 (0)45 - 546 88 88 , www.laurametaal.nl

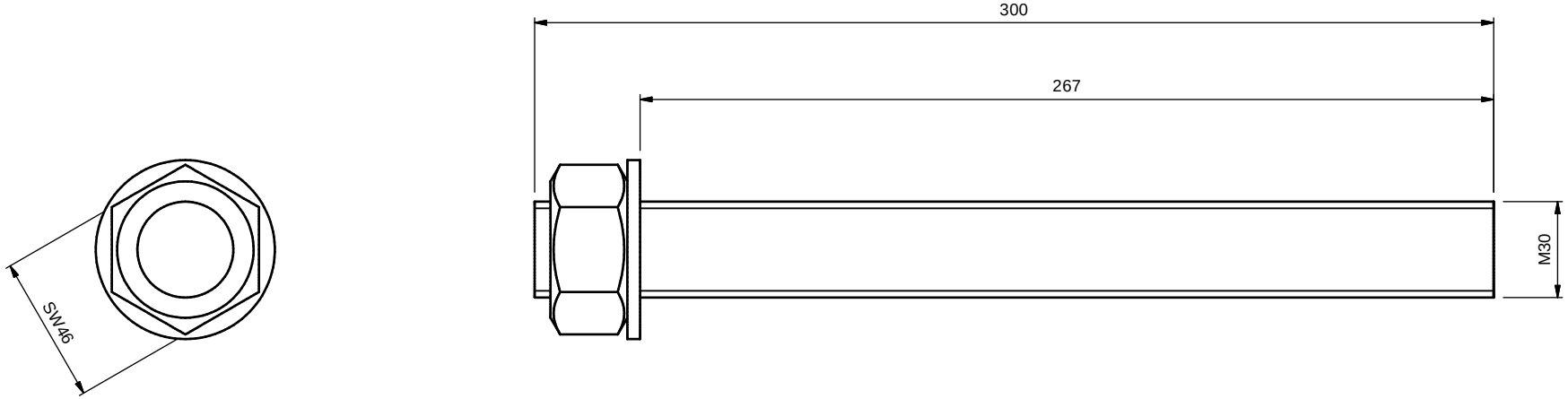

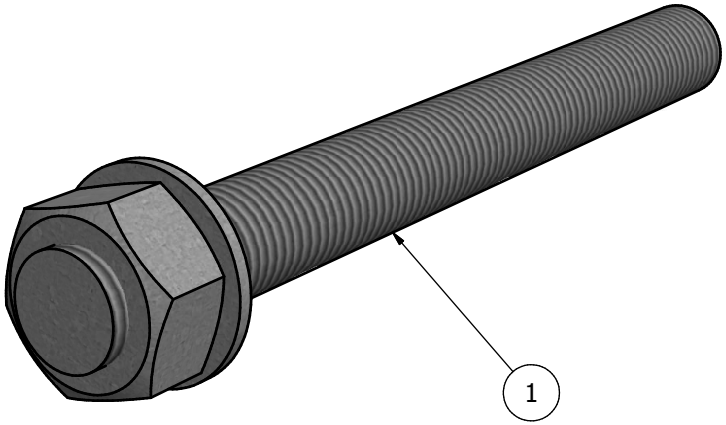

Pos	Aant.	Artikelnummer	Titel	Omschrijving	Materiaal
3	1		SafeZone	DIN125 M30	Th.verzinkt 8.8
2	1		SafeZone	DIN934 M30	Th.verzinkt 8.8
1	1		SafeZone	DIN976-1 M30x300	Th.verzinkt 8.8

LAURA METAAL
ROAD SAFETY

Materiaal:	Algemene maattoleranties	Toleranties lasconstructie	Lassen	Thermisch snijden
Massa: 1.95 kg	NEN-ISO 2768-c	NEN-EN-ISO 13920-C	NEN-EN-ISO 5817-D	NEN-EN-ISO 9013-542

Amerikaanse projectie:

Artikelnummer: KE31840030

Revisie:

Tekenaar: ramaekersn

Getekend: 15-3-2017

Maateenheid: mm

Controle:

Gecontroleerd:

Titel: SafeZone; M30 verankering

Schaal:

Opmerking:

Omschrijving: Verankering M30x300 mm.

Formaat: A3

LAURA METAAL EYGELSHOVEN BV , Rimburgerweg 40, NL-6471 XX Kerkrade, tel: +31 (0)45 - 546 88 88 , www.laurametaal.nl

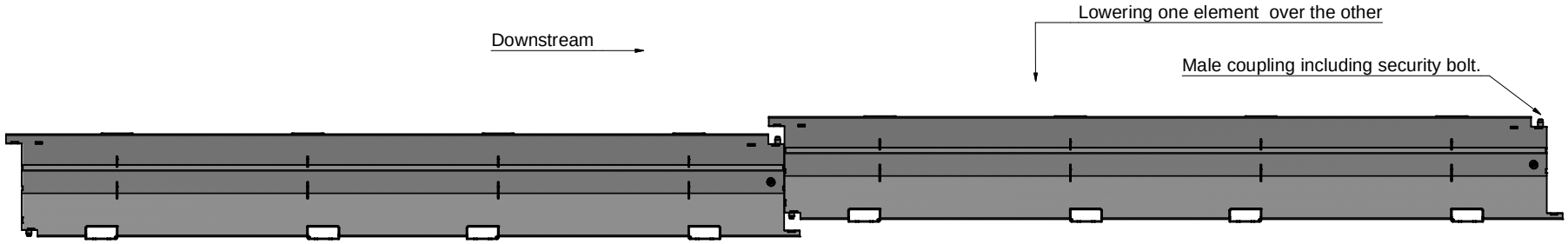

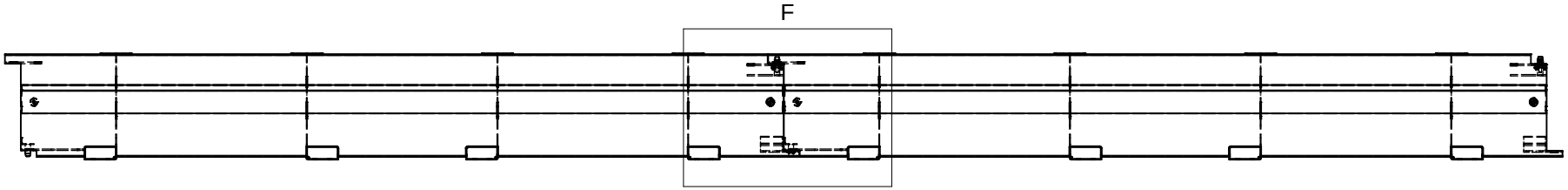

F (1:8)

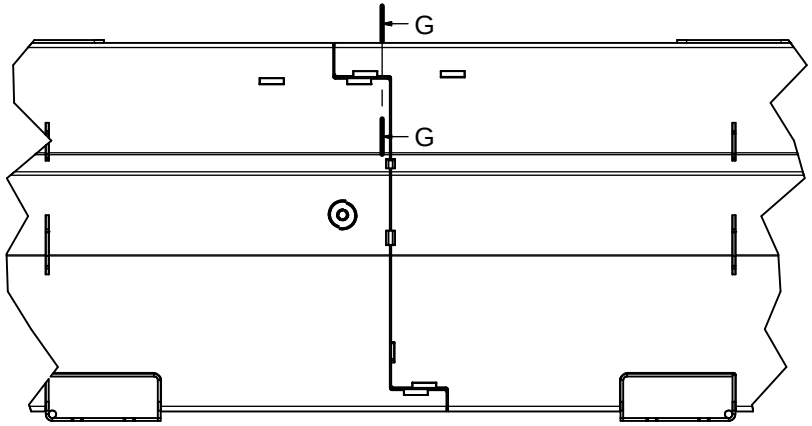

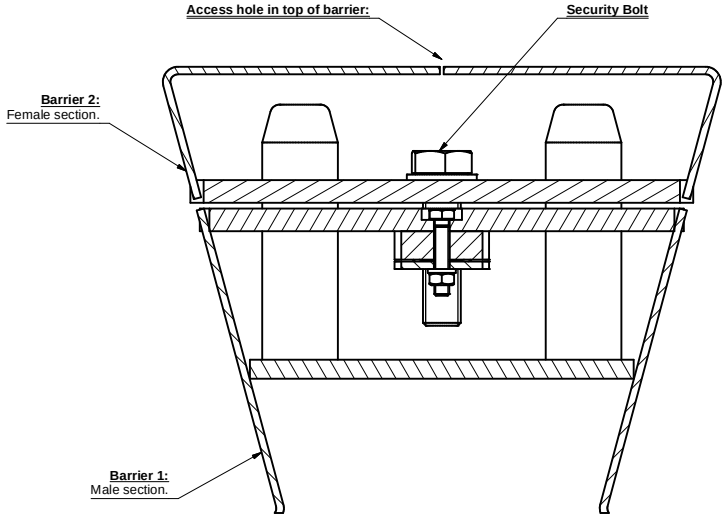

G-G (1:2)

LAURA METAAL ROAD SAFETY	Materiaal:	Algemene maattoleranties	Toleranties lasconstructie	Lassen	Thermisch snijden
	Massa: N/A	NEN-ISO 2768-c	NEN-EN-ISO 13920-C	NEN-EN-ISO 5817-D	NEN-EN-ISO 9013-542
	Amerikaanse projectie:	Artikelnummer: SafeZone			Revisie:
Tekenaar: ramaekers	Getekend: 15-3-2017	Maateenheid: mm	Titel: Connecting 2 barriers		Schaal:
Controle:	Gecontroleerd:				
Opmerking:			Omschrijving: Security set		Formaat: A2

LAURA METAAL EYGELSHOVEN BV , Rimburgerweg 40, NL-6471 XX Kerkrade, tel: +31 (0)45 - 546 88 88 , www.laurametaal.nl