U.S. Department of Transportation
Federal Highway Administration

February 22, 2021

1200 New Jersey Ave., SE
Washington, D.C. 20590

In Reply Refer To:
HSST-1/CC-165

Mr. John Annison
Valmont Highway International Pty Ltd
57 – 65 Airds Road,
Minto, NSW, 2566
Australia

Dear Mr. Annison:

This letter is in response to your September 10, 2020 request for the Federal Highway Administration (FHWA) to review a roadside safety device, hardware, or system for eligibility for reimbursement under the Federal-aid highway program. This FHWA letter of eligibility is assigned FHWA control number CC-165 and is valid until a subsequent letter is issued by FHWA that expressly references this device.

Decision

The following device is eligible within the length-of-need, with details provided in the form which is attached as an integral part of this letter:

- ArmorZone MASH TL2 End Treatment

Scope of this Letter

To be found eligible for Federal-aid funding, new roadside safety devices should meet the crash test and evaluation criteria contained in the American Association of State Highway and Transportation Officials'(AASHTO) Manual for Assessing Safety Hardware (MASH). However, the FHWA, the Department of Transportation, and the United States Government do not regulate the manufacture of roadside safety devices. Eligibility for reimbursement under the Federal-aid highway program does not establish approval, certification or endorsement of the device for any particular purpose or use.

This letter is not a determination by the FHWA, the Department of Transportation, or the United States Government that a vehicle crash involving the device will result in any particular outcome, nor is it a guarantee of the in-service performance of this device. Proper manufacturing, installation, and maintenance are required in order for this device to function as tested.

This finding of eligibility is limited to the crashworthiness of the system and does not cover other structural features, nor conformity with the Manual on Uniform Traffic Control Devices.

Eligibility for Reimbursement

Based solely on a review of crash test results and certifications submitted by the manufacturer, and the crash test laboratory, FHWA agrees that the device described herein meets the crash test and evaluation criteria of the AASHTO's MASH. Therefore, the device is eligible for reimbursement under the Federal-aid highway program if installed under the range of tested conditions.

- Name of system: ArmorZone MASH TL2 End Treatment
  Type of system: Crash Cushion
  Test Level: Test Level 2
  Testing conducted by: Karco Engineering
  Date of request: September 10, 2020

FHWA concurs with the recommendation of the accredited crash testing laboratory on the attached form.

Full Description of the Eligible Device

The device and supporting documentation, including reports of the crash tests or other testing done, videos of any crash testing, and/or drawings of the device, are described in the attached form.

Notice

This eligibility letter is issued for the subject device as tested. Modifications made to the device are not covered by this letter. Any modifications to this device should be submitted to the user (i.e., state DOT) as per their requirements.

You are expected to supply potential users with sufficient information on design, installation and maintenance requirements to ensure proper performance.

You are expected to certify to potential users that the hardware furnished has the same chemistry, mechanical properties, and geometry as that submitted for review, and that it will meet the test and evaluation criteria of AASHTO's MASH.

Issuance of this letter does not convey property rights of any sort or any exclusive privilege. This letter is based on the premise that information and reports submitted by you are accurate and correct. We reserve the right to modify or revoke this letter if: (1) there are any inaccuracies in the information submitted in support of your request for this letter, (2) the qualification testing was flawed, (3) in-service performance or other information reveals safety problems, (4) the system is significantly different from the version that was crash tested, or (5) any other information indicates that the letter was issued in error or otherwise does not reflect full and complete information about the crashworthiness of the system.

Standard Provisions

- To prevent misunderstanding by others, this letter of eligibility designated as FHWA control number CC-165 shall not be reproduced except in full. This letter and the test documentation upon which it is based are public information. All such letters and documentation may be reviewed upon request.

- This letter shall not be construed as authorization or consent by the FHWA to use, manufacture, or sell any patented system for which the applicant is not the patent holder.

- This FHWA eligibility letter is not an expression of any Agency view, position, or determination of validity, scope, or ownership of any intellectual property rights to a specific device or design. Further, this letter does not impute any distribution or licensing rights to the requester. This FHWA eligibility letter determination is made based solely on the crash-testing information submitted by the requester. The FHWA reserves the right to review and revoke an earlier eligibility determination after receipt of subsequent information related to crash testing.

Sincerely,

Michael S. Griffith

Michael S. Griffith
Director, Office of Safety Technologies
Office of Safety

Enclosures

Request for Federal Aid Reimbursement Eligibility of Highway Safety Hardware

Submitter	Date of Request:	September 10, 2020	◉ New ◯ Resubmission
	Name:	John Annison	
	Company:	Valmont Highway International Pty Ltd	
	Address:	57 – 65 Airds Road, Minto, NSW, 2566	
	Country:	Australia	
	To:	Michael S. Griffith, Director FHWA, Office of Safety Technologies	

I request the following devices be considered eligible for reimbursement under the Federal-aid highway program.

Device & Testing Criterion - Enter from right to left starting with Test Level

System Type	Submission Type	Device Name / Variant	Testing Criterion	Test Level
'CC': Crash Cushions, Attenuators, & Terminals	◉ Physical Crash Testing ◯ Engineering Analysis	ArmorZone MASH TL2 End Treatment	AASHTO MASH	TL2

By submitting this request for review and evaluation by the Federal Highway Administration, I certify that the product(s) was (were) tested in conformity with the AASHTO Manual for Assessing Safety Hardware and that the evaluation results meet the appropriate evaluation criteria in the MASH.

Individual or Organization responsible for the product:

Contact Name:	John Annison	Same as Submitter ☒
Company Name:	Valmont Highway International Pty Ltd	Same as Submitter ☒
Address:	57 – 65 Airds Road, Minto, NSW, 2566	Same as Submitter ☒
Country:	Australia	Same as Submitter ☒

Enter below all disclosures of financial interests as required by the FHWA `Federal-Aid Reimbursement Eligibility Process for Safety Hardware Devices' document.

Valmont Highway International Pty Ltd and Karco LLC share no financial interests between the two organisations. This includes no shared financial interest but not limited to:
1. Compensation including wages, salaries, commissions, professional fees, or fees for business referrals.
2. Research funding or other forms of research support.
3. Patents, copyrights, licenses, and other intellectual property interests.
4. Business ownership and investment interests.

PRODUCT DESCRIPTION

(●) New Hardware or Significant Modification ( ) Modification to Existing Hardware

The ArmorZone MASH TL2 End Treatment is a gating, non-redirective End Treatment designed to protect the end of ArmorZone MASH TL2 temporary longitudinal water filled safety barriers from errant vehicles.
The ArmorZone MASH TL2 End Treatment is free standing and does not require anchoring to the road surface. It can be installed on concrete road surfaces (as tested) and also asphalt, gravel and dirt road surfaces.
The ArmorZone MASH TL2 End Treatment comprises of one yellow HDPE ArmorZone module which has had holes cut into its sides to prevent filling with water, and it also has had slots cut into the barrier sides and connector to initiate crumpling when impacted. The steel connector bar (which is present in the ArmorZone MASH TL2 longitude barriers) has been removed.
The dimensions of the ArmorZone MASH TL2 End Treatment are the same as the ArmorZone MASH TL2 longitudinal barrier sections. Width 17.7 inches (450mm), Length 85 inches (2,160mm) Height 33.9 inches (860mm) and a weight of 56kg.
The connection between the ArmorZone MASH TL2 End Treatment and the ArmorZone MASH TL2 temporary water filled longitudinal barrier is the same as what is used to connect each section of the ArmorZone MASH TL2 longitudinal barrier. It comprises of three HDPE lugs protruding from the end of the yellow module that interlinks with the three protruding lugs on the last barrier in the run. A steel twin pin connector is then inserted down through holes in each of the nested lugs, thus locking the ArmorZone MASH TL2 End Treatment to the last ArmorZone barrier in the run.
For the TL2 tests conducted, the ArmorZone MASH TL2 end treatment was connected to a minimum of 21 units of the Armorzone MASH TL2 barrier for a total length of 154.0 ft. (48.4 m). All barrier units were filled with water to capacity via the fill hole at the top of each barrier. Each barrier weighed 124.0 lbs (56.2 kg) when empty and 1,030 lbs (467.2 kg) when filled to capacity. All units had a drain plug.
The ArmorZone MASH TL2 End Treatment was tested to and passed MASH TL2 2-40, 2-41, 2-42, 2-43 and 2-44.

CRASH TESTING

By signature below, the Engineer affiliated with the testing laboratory, agrees in support of this submission that all of the critical and relevant crash tests for this device listed above were conducted to meet the MASH test criteria. The Engineer has determined that no other crash tests are necessary to determine the device meets the MASH criteria.

Engineer Name:	Steven Matsusaka	
Engineer Signature:	Steven Matsusaka Digitally signed by Steven Matsusaka DN: cn=Steven Matsusaka, email=steven.matsusaka@idiada.com, c=US Date: 2020.09.10 19:04:46 -07'00'	
Address:	9270 Holly Rd, Adelanto, CA 92301	Same as Submitter ☐
Country:	United States of America	Same as Submitter ☐

A brief description of each crash test and its result:

Required Test Number	Narrative Description	Evaluation Results
2-30 (1100C)	Test for redirective crash cushions, not applicable to non-redirective crash cushions.	Non-Relevant Test, not conducted
2-31 (2270P)	Test for redirective crash cushions, not applicable to non-redirective crash cushions.	Non-Relevant Test, not conducted
2-32 (1100C)	Test for redirective crash cushions, not applicable to non-redirective crash cushions.	Non-Relevant Test, not conducted

Required Test Number	Narrative Description	Evaluation Results
2-33 (2270P)	Test for redirective crash cushions, not applicable to non-redirective crash cushions.	Non-Relevant Test, not conducted
2-34 (1100C)	Test for redirective crash cushions, not applicable to non-redirective crash cushions.	Non-Relevant Test, not conducted
2-35 (2270P)	Test for redirective crash cushions, not applicable to non-redirective crash cushions.	Non-Relevant Test, not conducted
2-36 (2270P)	Test for redirective crash cushions, not applicable to non-redirective crash cushions.	Non-Relevant Test, not conducted
2-37 (2270P)	Test for redirective crash cushions, not applicable to non-redirective crash cushions.	Non-Relevant Test, not conducted
2-38 (1500A)	Test for redirective crash cushions, not applicable to non-redirective crash cushions.	Non-Relevant Test, not conducted

2-40 (1100C)	The test article was aligned at a nominal angle of 0 degrees, with the crash cushion offset one quarter the vehicle's overall width. The test was conducted using a commercially available 2009 Kia Rio 4-door sedan with a test inertial mass of 2,412.9 lbs. (1,094.5 kg). The test was conducted with the crash cushion and the longitudinal barrier resting on a concrete surface. Upon vehicle engagement with the end treatment, the end treatment began to crush. The end treatment was completely crushed by approximately 0.144 s, at which point the vehicle velocity was 27. 1 mph (43.6 km/h). As the end treatment was crushing the entire Armorzone MASH TL2 longitudinal barrier was shifting rearward and the first unit immediately behind the end treatment began to deform. The barriers started to shift at approximately 0.016 s and the first unit began to lift slightly off the ground and deform at about 0.060 s. The vehicle's yaw rotation rate increased after the end treatment was crushed due to the interaction with the heavier reinforced barrier unit. The first unit immediately behind the end treatment deformed towards the driver side as the vehicle yawed in the opposite direction. The vehicle lost contact with the unit at 0.49.2 s after which the vehicle continued its yaw rotation and the installation continued to extend towards the left (driver) side until it reached a maximum dynamic deflection and working width of 13.6 ft. (4.1 m) and 15.0 ft. (4.6 m), respectively. The vehicle came to a stop 31.6 ft. (9.6 m) right and 13.1 ft. (4.0 m) downstream from the initial point of contact. The end treatment's performance was deemed as acceptable to the MASH standard based on the 2-40 test conducted. The test device was penetrated in a controlled fashion and without excessive deceleration before coming to a controlled stop. The vehicle was not penetrated and there was not potential for article penetration into the occupant compartment. It is therefore recommended that the performance of the Armorzone MASH TL2 End Treatment be considered as satisfactory to test level 2 test 40.	PASS

2-41 (2270P)	The test article was aligned at a nominal angle of 0 degrees, with the centreline of the vehicle aligned with the longitudinal centreline of the end treatment. The test was conducted using a commercially available 2013 RAM 1500 4-door pickup truck with a test inertial mass of 4,980.2 lbs. (2,259.0 kg). The test vehicle impacted the system at a velocity of 43.98 mph (70.78 km/h) and an impact angle of 0.3°. The vehicle initial point of contact with the system was 1.0 in. (25 mm) from the intended impact point. The vehicle's front bumper began to deform upon impact. The vehicle crushed the first unit and reached the second unit at approximately 0.120 s. The second unit began to lose its water at approximately 0.171 s. As the vehicle's front end approached the second unit's midpoint the front end began to pitch upward. The third unit began to lose its water at approximately 0.220 sand the system began to deflect to the right side. The vehicle continued forward and reached a maximum pitch angle of 12.5°. The first unit was underneath the vehicle when the front end returned to the ground. The vehicle came to rest 25.2 ft. (7.7 m) downstream and 8.0 ft. (2.4 m) left from its initial point of contact with the system. The Armorzone MASH TL2 End Treatment's performance was deemed as acceptable to the MASH standard based on the 2-41 test conducted. The test device was penetrated in a controlled fashion and without excessive deceleration before coming to a controlled stop. The vehicle was not penetrated and there was not potential for article penetration into the occupant compartment. It is therefore recommended that the performance of the Armorzone MASH TL2 End Treatment be considered as satisfactory to test level 2 test 41.	PASS

2-42 (1100C)	The test article was aligned at a nominal angle of 5 degrees, with the centreline of the vehicle aligned with the nose of the crash cushion. The test was conducted using a commercially available 2008 Kia Rio 4-door sedan with a test inertial mass of 2,410.7 lbs. (1,093.5 kg). The vehicle impacted the end treatment at an angle of 4.8° and a speed of 44.14 mph (71.04 km/h). Upon impact the empty module began to crush. The end treatment was completely crushed by approximately 0.126 s, at which point the vehicle's velocity was reduced to 29.43 mph (47.36 km/h). The vehicle remained relatively in its initial trajectory until the end treatment bottomed out and the first unit of the Armorzone began to deflect at about 0.140 s. The front of unit 1 was folded towards the field side at 0.275 s, which guided the vehicle towards the field side as it remained in contact with the end treatment. The vehicle continued forward and separated from the installation at 1.650 s. The vehicle came to a stop 25.9 ft. (7.9 m) right and 43.6 ft. (13.3 m) downstream from the initial point of contact. The Armorzone MASH TL2 End Treatment's performance was deemed as acceptable to the MASH standard based on the 2-42 test conducted. The test device was penetrated in a controlled fashion and without excessive deceleration before coming to a controlled stop. The vehicle was not penetrated and there was not potential for article penetration into the occupant compartment. It is therefore recommended that the end treatment be considered as satisfactory to test level 2 test 42.	PASS

2-43 (2270P)	The test article was aligned at a nominal angle of 5 degrees, with the centreline of the vehicle aligned with the nose of the crash cushion. The test was conducted using a commercially available 2012 Ram 1500 pickup truck with a test inertial mass of 4,992.3 lbs. (2,264.5 kg). The vehicle impacted the end treatment at an angle of 5.4° and a speed of 44.59 mph (71 .76 km/h). Upon impact the empty unit began to crush. The end treatment was completely crushed by approximately 0.128 s, at which point the vehicle's velocity was reduced to 34.87 mph (56.12 km/h). As the end treatment was crushing the Armorzone barriers began to shift rearward. After the end treatment was completely crushed, unit 1 of the Armorzone barrier began to deform. Unit 1 was significantly deformed and released its water before the subsequent unit (Unit 2) began to deform at 0.202 s. Units 1 and 2 began their deformation in a similar manner as a crease was created at the top of both upstream ends of the units, which caused the upstream end to bend upwards. This motion caused the vehicle to pitch nose up as it continued forward, which prevented any other Armorzone units from crushing. The vehicle reached a maximum pitch and roll angle of 34 .7° (at 0.952 s) and 10.7° (at 0.563 s), respectively, before coming to a stop. The vehicle came to a stop 2.2 ft. (0.7 m) right and 2.6 ft. (0.8 m) downstream from the initial point of contact. The Armorzone MASH TL2 End Treatment's performance was deemed as acceptable to the MASH standard based on the 2-43 test conducted. The test device was penetrated in a controlled fashion and without excessive deceleration before coming to a controlled stop. The vehicle was not penetrated and there was not potential for article penetration into the occupant compartment. It is therefore recommended that the end treatment be considered as satisfactory to test level 2 test 43.	PASS

2-44 (2270P)	The test article was aligned at a nominal angle of 20 degrees, with the centre of the vehicle aligned to the corner to the backup structure which in this case was the Armorzone MASH TL2 longitudinal barrier. The test was conducted using a commercially available 2012 RAM 1500 pickup truck with a test inertial mass of 4,992.3 lbs. (2,264.5 kg). The test was conducted with twenty-one (21) Armorzone units behind the end treatment, the first eight (8) units behind the end treatment were on concrete and the remaining rested on compacted soil. The intended impact point for this test was established by having the centre of the vehicle aligned with the field side front corner of the first Armorzone unit. This resulted in first contact occurring between the respective corners of the vehicle's bumper and the end treatment. The test vehicle impacted the end treatment at a velocity of 46.42 mph (7 4.71 km/h) and an impact angle of 20.5°. The impact forced the end treatment and Armorzone units to rotate towards the field side and rearwards about the original tangent installation. All units remained attached to one another and the vehicle separated from the article at 0.605 s. The vehicle's exit speed and angle upon exit were 23.63 mph (38.03 km/h) and 17.2°, respectively. The vehicle gated through the system in a stable manner. The end treatment's performance was deemed as acceptable to the MASH standard based on the 2-44 test conducted. The test vehicle came to a controlled stop and remained upright. The test vehicle was not penetrated and the occupant compartment deformation limits were not exceeded.	PASS
2-45 (1500A)	This test is primarily intended to evaluate the performance of a staged terminal or crash cushion. The ArmorZone MASH TL2 End Treatment is not a staging device and therefore this test was not conducted.	Non-Relevant Test, not conducted

Full Scale Crash Testing was done in compliance with MASH by the following accredited crash test laboratory (cite the laboratory's accreditation status as noted in the crash test reports.):

Laboratory Name:	Applus IDIADA KARCO Engineering, LLC	
Laboratory Signature:	Steven Matsusaka Digitally signed by Steven Matsusaka DN: cn=Steven Matsusaka, email=steven.matsusaka@idiada.com, c=US Date: 2020.09.10 19:04:55 -07'00'	
Address:	9270 Holly Rd, Adelanto, CA 92301	Same as Submitter ☐
Country:	United States of America	Same as Submitter ☐
Accreditation Certificate Number and Dates of current Accreditation period :	TL-371, July 15, 2020 - July 15, 2022	

Submitter Signature*: 17 Sept 2020

Submit Form

ATTACHMENTS

Attach to this form:

1) Additional disclosures of related financial interest as indicated above.
2) A copy of the full test report, video, and a Test Data Summary Sheet for each test conducted in support of this request.
3) A drawing or drawings of the device(s) that conform to the Task Force-13 Drawing Specifications [Hardware Guide Drawing Standards]. For proprietary products, a single isometric line drawing is usually acceptable to illustrate the product, with detailed specifications, intended use, and contact information provided on the reverse. Additional drawings (not in TF-13 format) showing details that are relevant to understanding the dimensions and performance of the device should also be submitted to facilitate our review.

FHWA Official Business Only:

Eligibility Letter		
Number	Date	Key Words

MASH Test 2-40 Summary

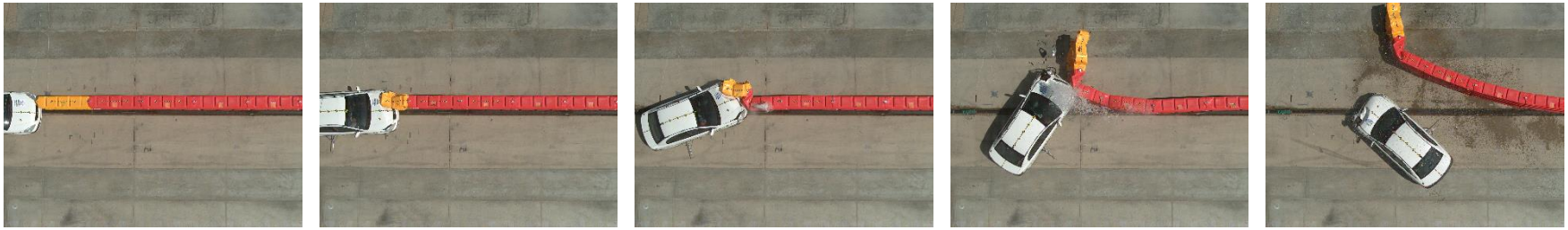

0.000 s | 0.100 s | 0.225 s | 0.425 s | 1.300 s

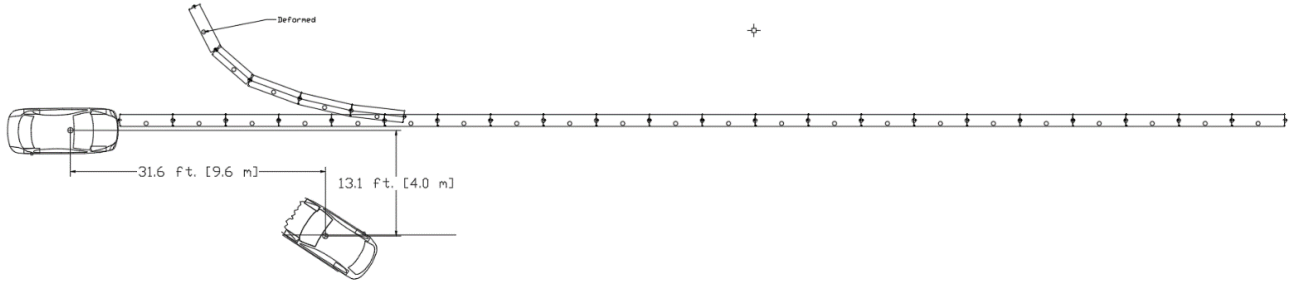

General Information

Test Agency	KARCO Engineering, LLC.
KARCO Test No	P38213-01
Test Designation	2-40
Test Date	08/01/18

Test Article

Name / Model	Armorzone MASH TL2 End Treatment
Type	Crash Cushion
Installation Length	144.6 ft. (44.1 m)
Terminal Length	End Treatment & Pin
Road Surface	Concrete

Test Vehicle

Type / Designation	1100C
Year, Make, and Model	2009 Kia Rio
Curb Mass	2,407.4 lbs (1,092.0 kg)
Test Inertial Mass	2,412.9 lbs (1,094.5 kg)
Gross Static Mass	2,577.2 lbs (1,169.0 kg)

Impact Conditions

Impact Velocity	44.26 mph (71.23 km/h)
Impact Angle	0.0°
Location / Orientation	1/4 Offset
Kinetic Energy	158.0 kip-ft (214.2 kJ)

Exit Conditions

Exit Velocity	N/A
Exit Angle	N/A
Final Vehicle Position	31.6 ft. (9.6 m) downstream 13.1 ft. (4.0 m) Right
Exit Box Criteria Met	N/A
Vehicle Snagging	None
Vehicle Pocketing	None
Vehicle Stability	Satisfactory
Maximum Roll Angle	-9.3 °
Maximum Pitch Angle	8.9 °
Maximum Yaw Angle	127.9 °

Occupant Risk

Longitudinal OIV	28.9 ft/s (8.8 m/s)
Lateral OIV	1.3 ft/s (0.4 m/s)
Longitudinal RA	-7.4 g
Lateral RA	-4.4 g
THIV	28.9 ft/s (8.8 m/s)
PHD	7.7 g
ASI	0.69

Test Article Deflections

Static	13.6 ft. (4.1 m)
Dynamic	13.6 ft. (4.1 m)
Working Width	15.0 ft (4.6 m)
Debris Field	N/A

Vehicle Damage

Vehicle Damage Scale	12-FD-3
CDC	12FDEW2
Maximum Intrusion	0.2 in. (5 mm)

Figure 8 Summary of Test 2-40

MASH Test 2-41 Summary

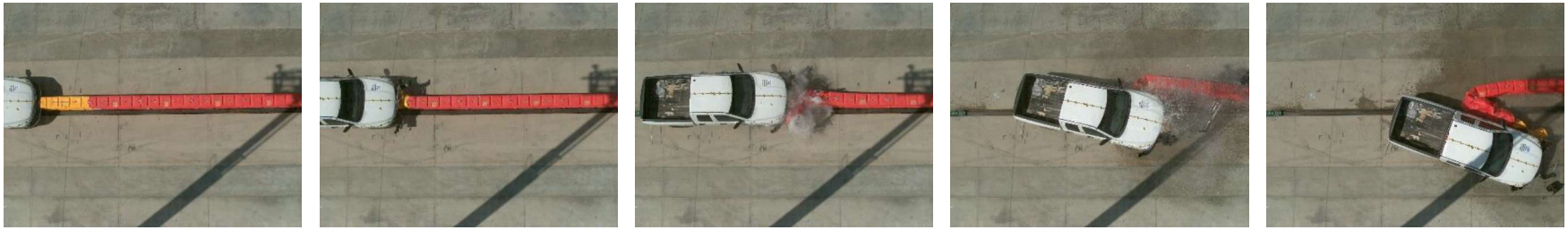

0.000 s | 0.100 s | 0.350 s | 0.850 s | 2.000 s

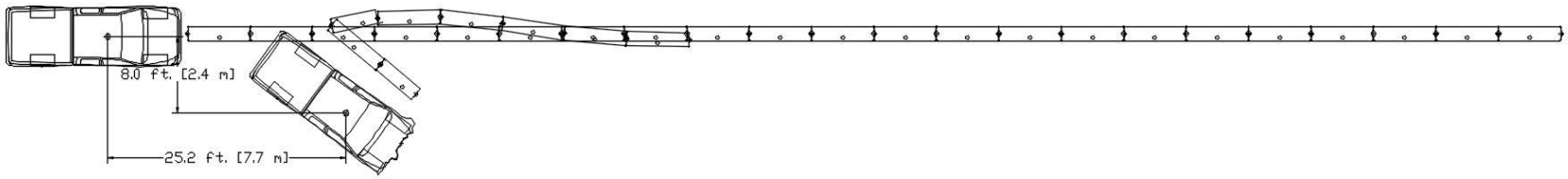

GENERAL INFORMATION

Test Agency	KARCO Engineering, LLC.
KARCO Test No.	P38214-01
Test Designation	2-41
Test Date	08/01/18

TEST ARTICLE

Name / Model	ArmorZone TL2 End Treatment
Type	Crash Cushion
Installation Length	155.8 ft. (47.5 m)
Terminal Length	7.1 ft. (2.2 m)
Road Surface	Concrete

TEST VEHICLE

Type / Designation	2270P
Year, Make, and Model	2013 RAM 1500
Curb Mass	4,877.6 lbs (2,212.5 kg)
Test Inertial Mass	4,980.2 lbs (2,259.0 kg)
Gross Static Mass	4,980.2 lbs (2,259.0 kg)

Impact Conditions

Impact Velocity	43.98 mph (70.78 km/h)
Impact Angle	0.3°
Location / Orientation	1.0 in. (25 mm) left
Kinetic	322.0 kip-ft (436.6 kJ)

Exit Conditions

Exit Velocity	N/A
Exit Angle	N/A
Final Vehicle Position	25.2 ft. (7.7 m) Downstream 8.0 ft. (2.4 m) Right
Exit Box Criteria Met	N/A
Vehicle Snagging	None
Vehicle Pocketing	None
Vehicle Stability	Satisfactory
Maximum Roll Angle	14.2 °
Maximum Pitch Angle	-12.5 °
Maximum Yaw Angle	-19.2 °

Occupant Risk

Longitudinal OIV	23.3 ft/s (7.1 m/s)
Lateral OIV	0.0
Longitudinal RA	-4.2 g
Lateral RA	1.6 g
THIV	23.3 ft/s (7.1 m/s)
PHD	4.0 g
ASI	0.5

Test Article Deflections

Static	6.4 ft. (2.0 m)
Dynamic	8.8 ft. (2.7 m)
Working Width	11.3 ft. (3.4 m)
Debris Field	N/A

Vehicle Damage

Vehicle Damage Scale	12-FC-5
CDC	12FCEW3
Maximum Intrusion	0.3 in. (8 mm)

Figure 11 Summary of Test 2-41

MASH Test 2-44 Summary

0.000 s | 0.150 s | 0.350 s | 0.550 s | 0.950 s

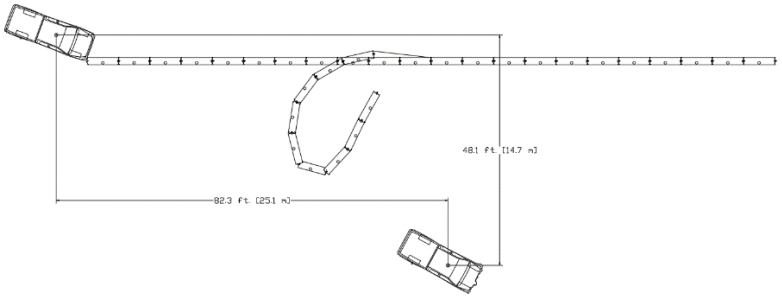

General Information

Test Agency	KARCO Engineering, LLC.
KARCO Test No.	P38227-01
Test Designation	2-44
Test Date	08/02/18

Test Article

Name / Model	Armorzone MASH TL2 End Treatment
Type	Crash Cushion
Installation Length	144.6 ft. (44.1 m)
Terminal Length	End Treatment unit and pin
Road Surface	Concrete

Test Vehicle

Type / Designation	2270P
Year, Make, and Model	2012 Ram 1500
Curb Mass	4,943.8 lbs (2,242.5 kg)
Test Inertial Mass	4,992.3 lbs (2,264.5 kg)
Gross Static Mass	4,992.3 lbs (2,264.5 kg)

Impact Conditions

Impact Velocity	46.42 mph (74.71 km/h)
Impact Angle	20.5°
Location / Orientation	Vehicle CL to LON CIP
Kinetic Energy	359.6 kip-ft (487.6 kJ)

Exit Conditions

Exit Velocity	23.63 mph (38.03 km/h)
Exit Angle	17.2°
Final Vehicle Position	82.3 ft. (25.1 m) dw 48.1 ft. (14.7 m) Right
Vehicle Snagging	N/A
Vehicle Pocketing	None
Vehicle Stability	None
Maximum Roll Angle	Satisfactory
Maximum Pitch Angle	-1.6 °
Maximum Yaw Angle	-5.4 °
Maximum Yaw Angle	-20.9

Occupant Risk

Longitudinal OIV	29.9 ft/s (9.1 m/s)
Lateral OIV	2.0 ft/s (0.6 m/s)
Longitudinal RA	-3.9 g
Lateral RA	1.5 g
THIV	29.9 ft/s (9.1 m/s)
PHD	3.9 g
ASI	0.96

Test Article Deflections

Static	14.3 ft. (4.4 m)
Dynamic	Out of View
Working Width	15.7 ft. (4.8 m)

Vehicle Damage

Vehicle Damage Scale	12-FD-3
CDC	12FDEW2
Maximum Intrusion	0.2 in. (5 mm)

Figure 14 Summary of Test 2-44

MASH Test 2-42 Summary

0.000 s | 0.150 s | 0.300 s | 0.550 s | 1.200 s

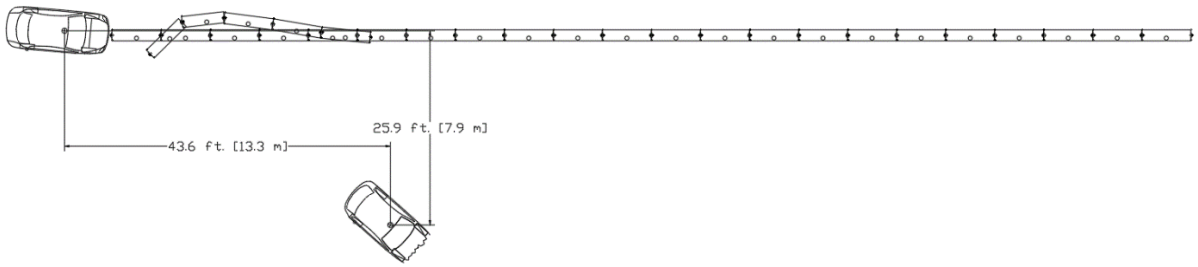

General Information

Test Agency	KARCO Engineering, LLC.
KARCO Test No.	P38215-01
Test Designation	2-42
Test Date	08/06/18

Test Article

Name / Model	Armorzone MASH TL2 End Treatment
Type	Crash Cushion
Installation Length	144.6 ft. (44.1 m)
Terminal Length	End Treatment unit and pin
Road Surface	Concrete

Test Vehicle

Type / Designation	1100C
Year, Make, and Model	2008 Kia Rio
Curb Mass	2,304.9 lbs (1,045.5 kg)
Test Inertial Mass	2,410.7 lbs (1,093.5 kg)
Gross Static Mass	2,576.1 lbs (1,168.5 kg)

Impact Conditions

Impact Velocity	44.14 mph (71.04 km/h)
Impact Angle	4.8°
Location / Orientation	Vehicle CL to nose of system
Kinetic Energy	157.0 kip-ft (212.9 kJ)

Exit Conditions

Exit Velocity	7.43 mph (11.96 km/h)
Exit Angle	28.5°
Final Vehicle Position	43.6 ft. (13.3 m) dw 25.9 ft. (7.9 m) Right
Vehicle Snagging	None
Vehicle Pocketing	None
Vehicle Stability	Satisfactory
Maximum Roll Angle	4.8 °
Maximum Pitch Angle	4.3 °
Maximum Yaw Angle	-23.5 °

Occupant Risk

Longitudinal OIV	30.8 ft/s (9.4 m/s)
Lateral OIV	4.6 ft/s (1.4 m/s)
Longitudinal RA	-8.1 g
Lateral RA	3.8 g
THIV	31.2 ft/s (9.5 m/s)
PHD	8.3 g
ASI	0.84

Test Article Deflections

Static	2.3 ft. (0.7 m)
Dynamic	4.9 ft. (1.5 m)
Working Width	6.3 ft (1.9 m)

Vehicle Damage

Vehicle Damage Scale	12-FD-3
CDC	12FDEW2
Maximum Intrusion	0.6 in. (15 mm)

Figure 17 Summary of Test 2-42

MASH Test 2-43 Summary

0.000 s | 0.050 s | 0.300 s | 0.800 s | 2.500 s

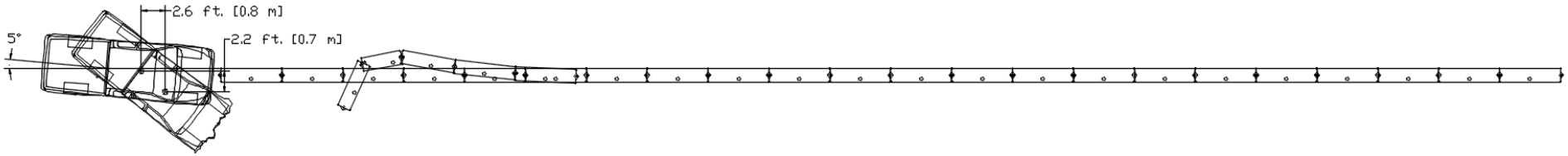

General Information

Test Agency	KARCO Engineering, LLC.
KARCO Test No.	P38216-01
Test Designation	2-43
Test Date	08/06/18

Test Article

Name / Model	Armorzone MASH TL2 End Treatment
Type	Crash Cushion
Installation Length	144.6 ft. (44.1 m)
Terminal Length	End Treatment unit and pin
Road Surface	Concrete

Test Vehicle

Type / Designation	2270P
Year, Make, and Model	2012 RAM 1500
Curb Mass	5,054.0 lbs (2,292.5 kg)
Test Inertial Mass	4,992.3 lbs (2,264.5 kg)
Gross Static Mass	4,992.3 lbs (2,264.5 kg)

Impact Conditions

Impact Velocity	44.59 mph (71.76 km/h)
Impact Angle	5.4°
Location / Orientation	Vehicle CL to nose of system
Kinetic Energy	331.8 kip-ft (449.9 kJ)

Exit Conditions

Exit Box Criteria Met	N/A
Exit Velocity	N/A
Exit Angle	2.6 ft. (0.8 m) Up
Final Vehicle Position	2.2 ft. (0.7 m) Right
	N/A
Vehicle Snagging	Satisfactory
Vehicle Pocketing	Satisfactory
Vehicle Stability	Satisfactory
Maximum Roll Angle	-9.3 °
Maximum Pitch Angle	8.9 °
Maximum Yaw Angle	127.9 °

Occupant Risk

Longitudinal OIV	28.9 ft/s (8.8 m/s)
Lateral OIV	1.3 ft/s (0.4 m/s)
Longitudinal RA	-7.4 g
Lateral RA	-4.4 g
THIV	28.9 ft/s (8.8 m/s)
PHD	7.7 g
ASI	0.69

Test Article Deflections

Static	1.9 ft. (1.4 m)
Dynamic	4.6 ft. (1.4 m)
Working Width	13.6 ft (4.1 m)

Vehicle Damage

Vehicle Damage Scale	12-FC-5
CDC	12FDEW2
Maximum Intrusion	0.3 in. (7 mm)

Figure 20 Summary of Test 2-43

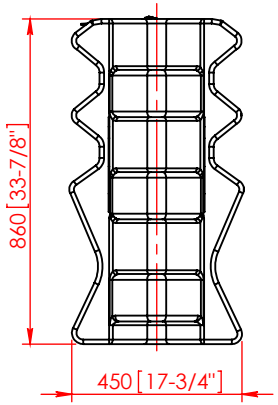

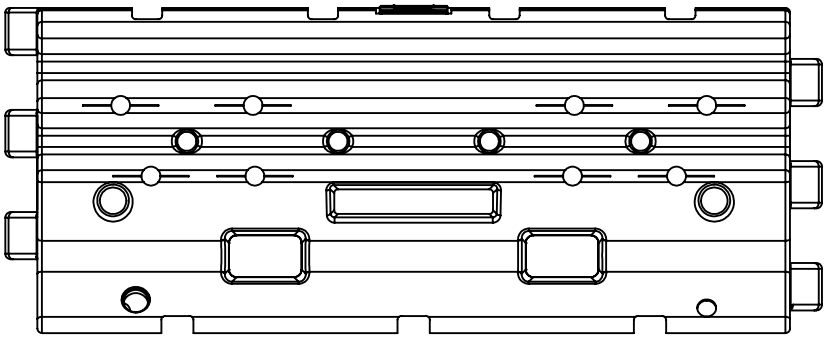

Note:
No Steel Connector inside
Weight 50kg

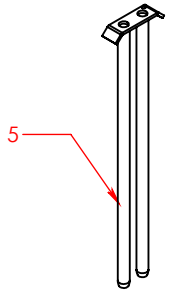

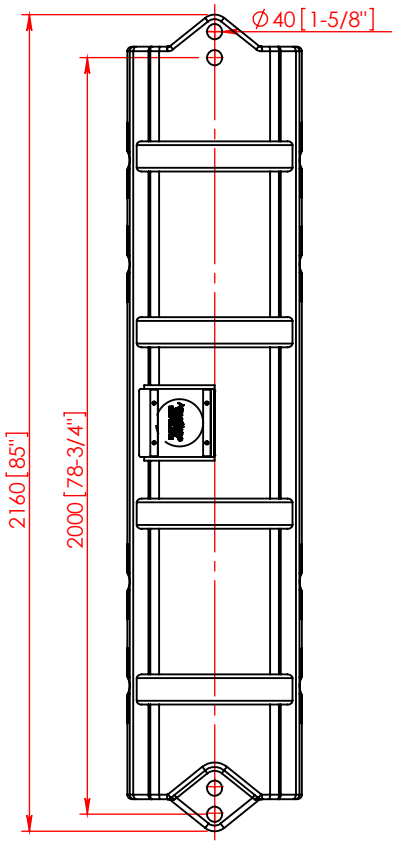

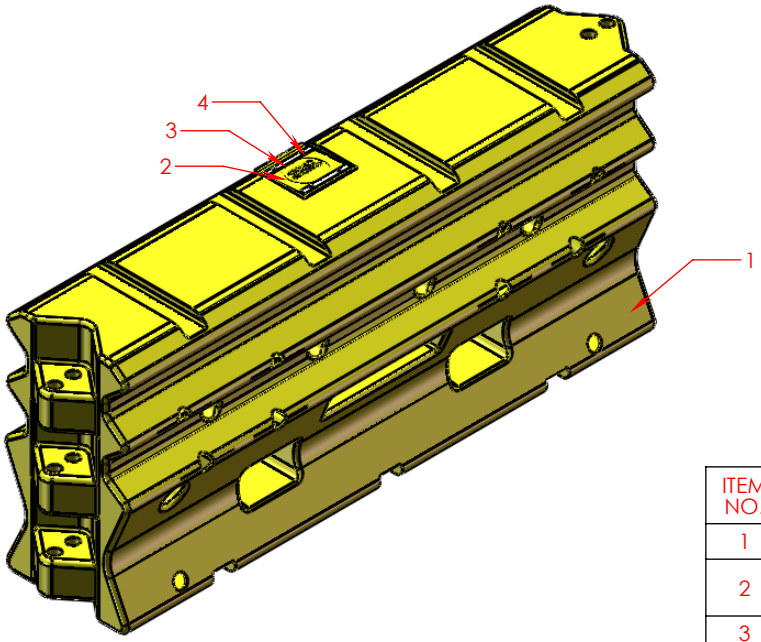

ITEM NO.	DESCRIPTION	QTY.
1	Plastic Shell	1
2	Lid	1
3	Lid Plate	2
4	Lid Screw	4
5	Standard Pin	1

REV.	CHANGES	DATE
A	INITIAL ISSUE	11/11/2010

SCALE: 1:20

	DATE	INIT.
DRAWN BY	11/11/2010	LW
APPR'D BY	11/11/2010	BM

Standard Tolerance

ArmorZone™ End Treatment

valmont HIGHWAY
57-65 Airds Road,
Minto, NSW, 2566,
Australia
tel. 61 2 9827 3333
fax. 61 2 9827 3300
www.ingalcivil.com.au

SHEET	DRAWING NUMBER	REV.
1 OF 1	AI0274	A