STATE	PROJECT	SHEET NUMBER

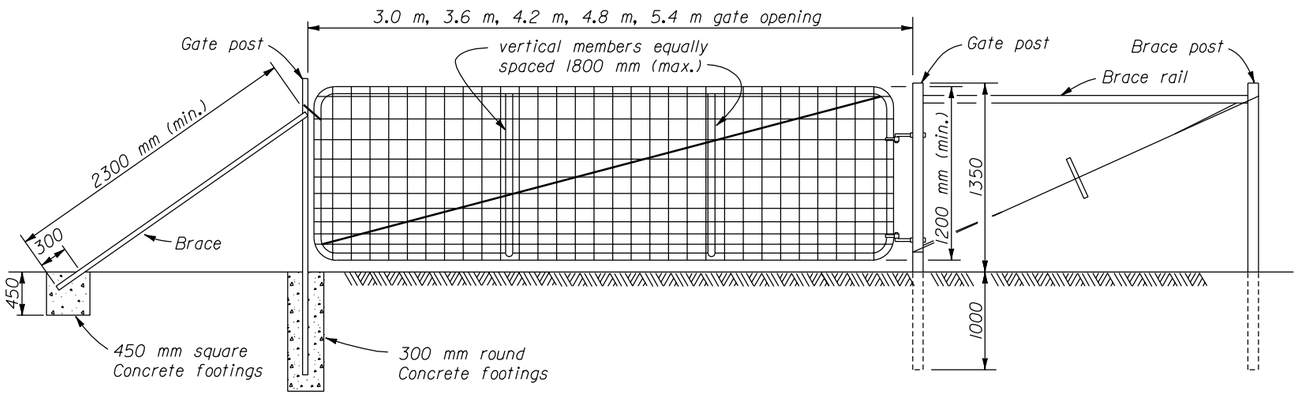

METAL GATE BRACE

WOOD GATE BRACE

SINGLE METAL ENTRANCE GATE

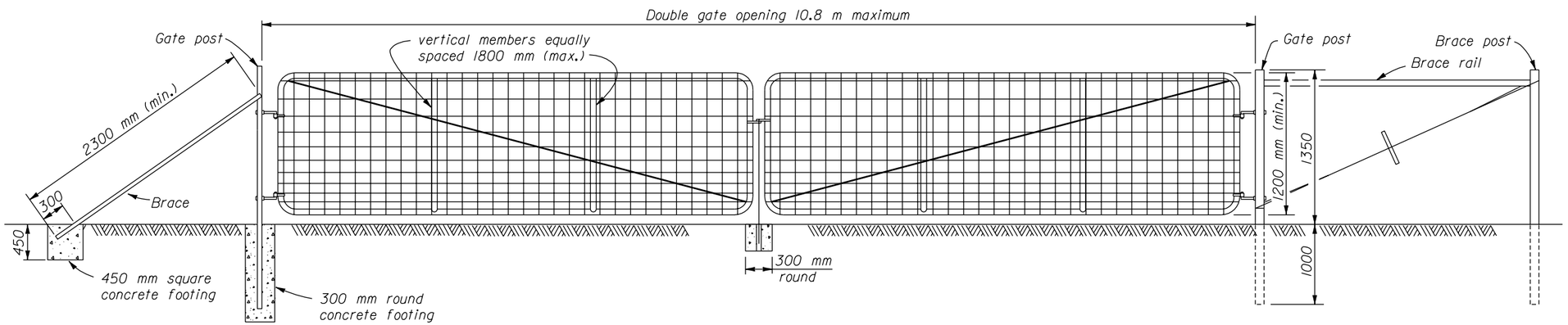

METAL GATE BRACE

WOOD GATE BRACE

DOUBLE METAL ENTRANCE GATE

NOTE:

1. Dimensions not labeled are in millimeters.
2. Manufacture gates of galvanized steel pipe not less than 25 mm nominal diameter (nominal mass 0.76 kg per linear meter) for frame and vertical braces. For each gate, provide two upright braces of the same material as the frame, spaced at 1/3 points in the gate. Place steel wire fence fabric conforming to design no. 1047-6-12½ in AASHTO M 279 on the face of the gate. Equip each gate with adjustable 9.5 mm diameter diagonal truss rods from corner to corner. Provide hinges and 2-way self closing latch of an approved rust proof mallable iron or steel.
3. Where a single opening requires two gates, provide an approved drop bar and fastener between the gates. Where two metal gates are installed in a single opening both gates will be measured for payment.
4. Approved alternate gates may be used.

NO SCALE

U.S. DEPARTMENT OF TRANSPORTATION
FEDERAL HIGHWAY ADMINISTRATION
WESTERN FEDERAL LANDS HIGHWAY DIVISION

METRIC DETAIL

WASHINGTON GATE

DETAIL APPROVED FOR USE 3/1996

REVISED:

DETAIL WM619-81

13 DEC 2000

f:\standraw\metric\details\wm619b1.dgn