STATE	PROJECT	SHEET NUMBER

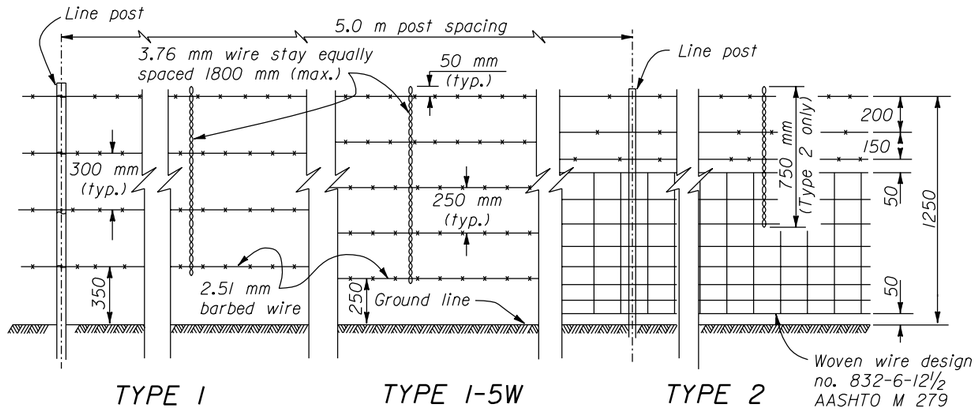

FENCE

POST DIMENSIONS						
MEMBER	WOOD			STEEL		
	ROUND		SQUARE	SHAPE	kg/m (min.)	SIZE
	dia. of small end		SIZE			
	min.-max.	min. avg.	nominal		nominal	nominal
Line post	75-100	75	75x75	Tee, channel or U-bar	1.98	U.S. Comm. Standard
Brace	40-140	100	100x100	Round pipe	3.38	approx. 40 mm OD
				Angle	3.63	51x51x6.4 mm
Other posts	100-175	125	125x125	Round pipe	5.43	60.3 mm OD
				Angle	6.10	64x64x6.4 mm

ROCK JACK LUMBER REQUIRED		
Post	1 each	100x150 x 1400 mm
Ground pieces	3 each	50x150 x 1200 mm
Platform	4 each	50x200 x 1200 mm
Diagonal brace	2 each	50x150 x 1500 mm

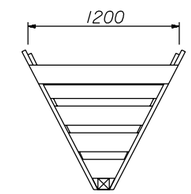

PLAN VIEW

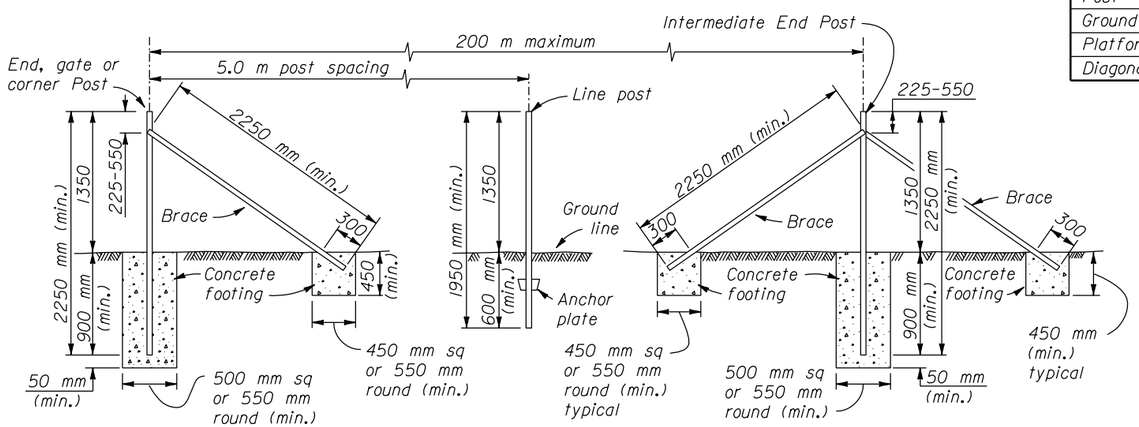

END, GATE OR CORNER BRACE

LINE BRACE

STEEL POSTS

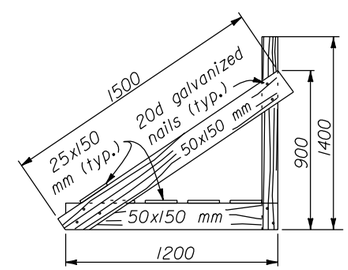

SIDE VIEW

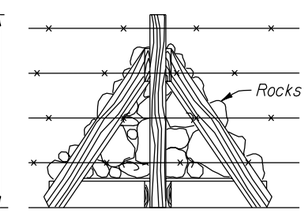

FRONT VIEW

ROCK JACK

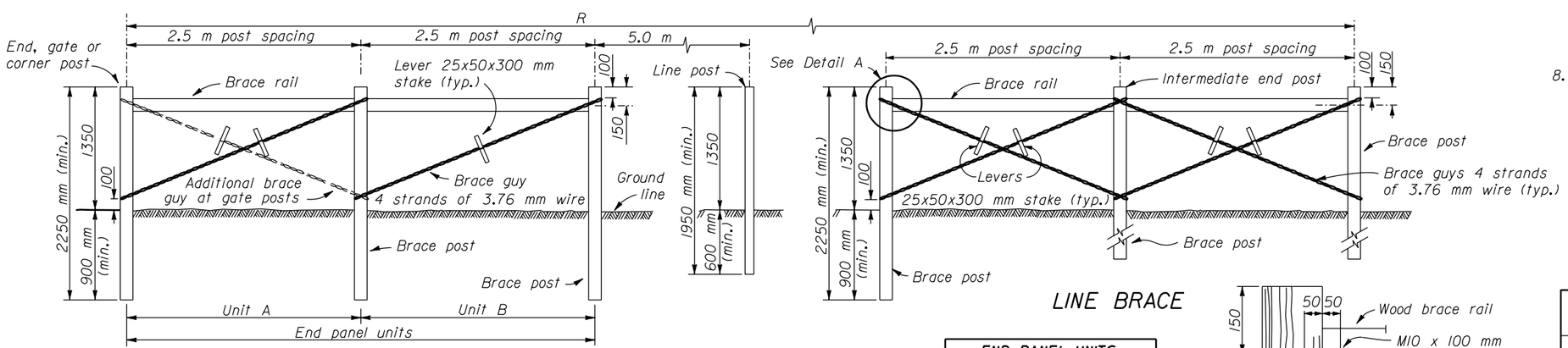

END, GATE OR CORNER BRACE

WOOD POSTS

LINE BRACE

END PANEL UNITS		
ALL FENCE TYPES	R	PANELS
	6 or less	None
	6 - 100	A
	Over 100	A & B

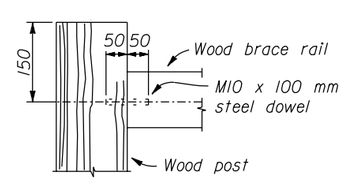

DETAIL A

NO SCALE

NOTE:

1. Dimensions not labeled are in millimeters.
2. Furnish either zinc coated (galvanized) or aluminum coated steel barbed wire. Fabricate zinc coated barbed wire from two strands of 2.51 mm steel wire with a Class 3 zinc coating and 2 point or 4 point barbs of 2.03 mm zinc coated wire. Fabricate aluminum coated barbed wire from two strands of 2.51 mm aluminum coated steel wire with 4 point barbs of 2.03 mm aluminum coated or alunimum alloy wire.
3. Furnish either zinc coated (galvanized) or aluminum coated steel wire fence fabric. If zinc coated fabric is furnished, use Grade 60 fabric with a Class 1 coating.
4. Furnish 3.05 mm tie wire or wire clamps for fasteners in metal posts. Galvanize wire stays, tie wire, wire loops, and wire clamps with a Class 1 zinc coating according to ASTM A 641.
5. Furnish either painted or galvanized steel fence posts for tee, channel or U bar shapes. Furnish galvanized steel round pipe or steel angle for posts and braces. Fit round pipe posts with snug-fitting galvanized metal caps. Fabricate steel line posts and angles from Type A steel conforming to AASHTO M 281. Fabricate steel pipe posts and braces according to AASHTO M 160.
6. Furnish Douglas fir, Western hemlock or Western pine for fence posts, brace rails, rock jacks, and wood stays. Treat the posts and brace rails with creosote, pentachlorophenal, ACZA, or CCA, Type 1, A, B, or C.
7. Use 50x50x1300 mm minimum length wood stays in areas of heavy snowfall or drifting (over 900 mm). Rest stays firmly on the ground and space as shown for wire stays. Staple all barbed wires, and a minimum of 4 horizontal wires for woven wire fabric, where applicable.
8. Rock jacks are acceptable to support the fence across solid rock areas on lieu of posts embedded in concrete.

U.S. DEPARTMENT OF TRANSPORTATION
FEDERAL HIGHWAY ADMINISTRATION
WESTERN FEDERAL LANDS HIGHWAY DIVISION

METRIC DETAIL

OREGON RIGHT-OF-WAY FENCES

DETAIL APPROVED FOR USE 3/1996

REVISED:

DETAIL WM619-70

13 DEC 2000

f:\standrdw\metric\details\wm61970.dgn