PROJECT	SHEET NUMBER

CONCRETE ROUND PIPE CULVERT

PIPE SIZE DIAMETER INCHES	FILL HEIGHT AND PIPE CLASS TABLE								
		EMBANKMENT				TRENCH			
	MINIMUM COVER INCHES	CLASS II	CLASS III	CLASS IV	CLASS V	CLASS II	CLASS III	CLASS IV	CLASS V
		MAXIMUM FILL HEIGHT ABOVE TOP OF PIPE IN FEET							
12	12	10	10	15	23	18	18	26	37
18	12	10	10	25	39	13	13	31	45
24	12	10	10	15	30	15	15	22	40
30	12	9	13	15	35	13	16	20	46
36	12	9	9	20	41	10	13	26	56
48	12	12	13	26	44	15	16	30	49
60	12	15	17	28	44	15	20	32	49
72	12	13	17	30	41	15	20	35	49
84	12	13	19	30		15	23	37	
96	12	13	20			15	24		
108	14	15	20			18	26		

LEGEND:

- Bedding material (uncompacted)
- Embankment material placed in layers not exceeding 6" compacted depth.
- Compacted backfill material placed in layers not exceeding 6" compacted depth, or lean concrete backfill according to Section 614
- Impermeable backfill material

NOTE:

1. When directed, camber pipe culverts upwards from a chord through the inlet and outlet inverts an ordinate amount equal to 1% of the pipe length. Develop camber on a parabolic curve. If the midpoint elevation on the parabolic curve as designed exceeds the elevation of the inlet invert, reduce the amount of camber or increase the pipe culvert gradient.
2. For flexible pavement and aggregate surface roadways, measure minimum cover from the top of the pipe culvert to the bottom of the roadway subgrade. For rigid pavements, measure minimum cover from the top of the pipe culvert to the top of the pavement. For all roadway surface types, measure maximum fill height from the top of the pipe culvert to the top of the pavement.
3. Pipe compaction limits shown are for pipe installation in an embankment. For pipe installation in a trench, the compaction limits are the walls of the trench.
4. Where unyielding or unstable material is encountered, install the pipe culvert according to the limits of pipe compaction shown on Standard 602-3.
5. Maximum fill heights for pipe culvert installations may be increased on approval of site-specific structural pipe designs meeting the criteria of AASHTO Standard Specifications for Highway Bridges.
6. Use Supplemental Concrete Pipe Tie when specified in the contract documents.

BEDDING DEPTH	
PIPE SIZE (H)	DEPTH
12" TO 54"	4"
> 54"	6"

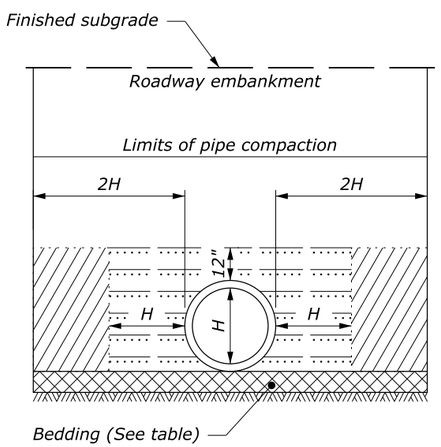

EMBANKMENT INSTALLATION

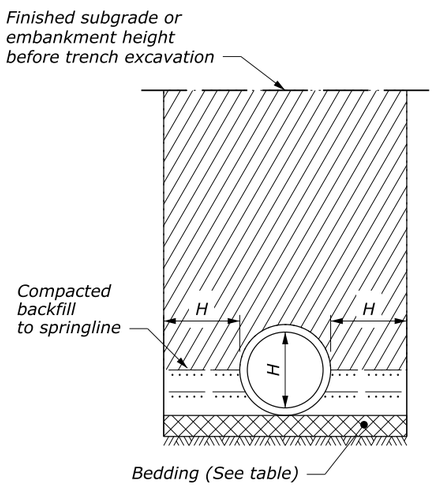

TRENCH INSTALLATION

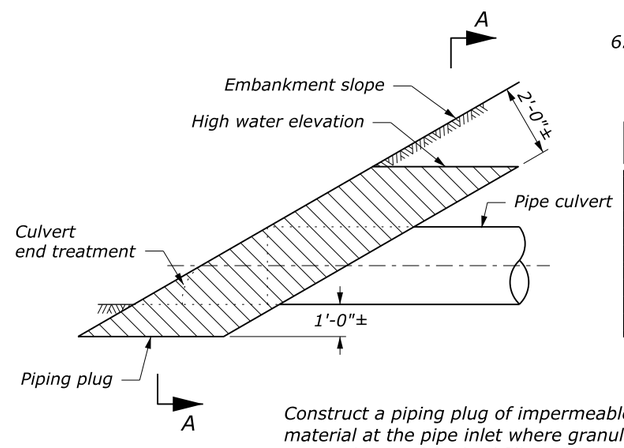

Construct a piping plug of impermeable backfill material at the pipe inlet where granular material is used for backfill. Width may be adjusted to tie into impervious material.

PIPING PLUG

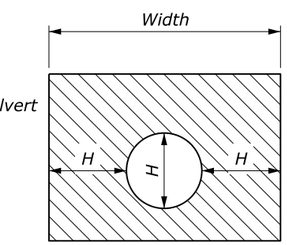

SECTION A-A

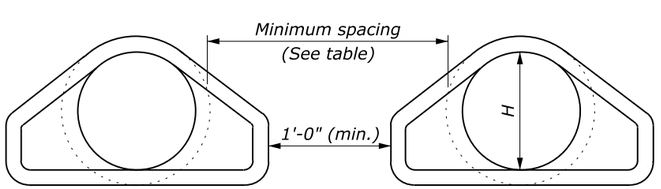

MULTIPLE ROUND PIPE INSTALLATION

MINIMUM SPACING		
DIAMETER	EMBANKMENT	TRENCH
12"-36"	15"	2H
36"-96"	0.5H	72"
OVER 96"	48"	72"

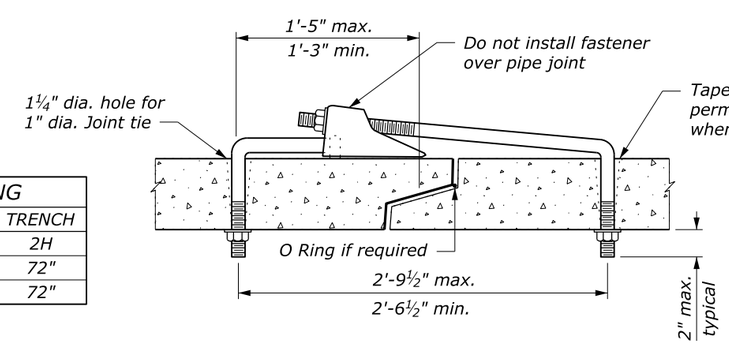

SUPPLEMENTAL CONCRETE PIPE TIE

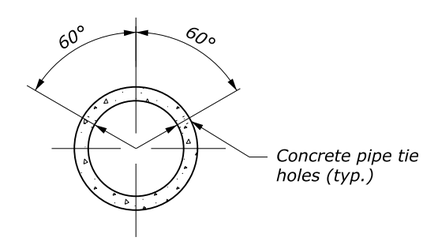

NO SCALE

U.S. DEPARTMENT OF TRANSPORTATION, FHWA
OFFICE OF FEDERAL LANDS HIGHWAY

CONCRETE PIPE CULVERT INSTALLATION

FLH STANDARD 602-7

SPECIFICATION FP-14

APPROVED FOR USE 8/2024

PROJECT	SHEET NUMBER

CONCRETE ROUND PIPE CULVERT

FILL HEIGHT AND PIPE CLASS TABLE

PIPE SIZE DIAMETER	MINIMUM COVER	EMBANKMENT CLASS II	EMBANKMENT CLASS III	EMBANKMENT CLASS IV	EMBANKMENT CLASS V	TRENCH CLASS II	TRENCH CLASS III	TRENCH CLASS IV	TRENCH CLASS V
		MAXIMUM FILL HEIGHT ABOVE TOP OF PIPE IN METERS							
300	300	3.0	3.0	4.5	7.0	5.5	5.5	8.0	11.5
450	300	3.0	3.0	7.5	12.0	4.0	4.0	9.0	13.5
600	300	3.0	3.0	4.5	9.0	4.5	4.5	6.5	12.0
750	300	2.5	4.0	4.5	10.5	4.0	5.0	6.0	14.0
900	300	2.5	2.5	6.0	12.5	3.0	4.0	8.0	17.0
1200	300	3.5	4.0	8.0	13.5	4.5	5.0	9.0	15.0
1500	300	4.5	5.0	8.5	13.5	4.5	6.0	9.5	15.0
1800	300	4.0	5.0	9.0	12.5	4.5	6.0	10.5	15.0
2100	300	4.0	5.5	9.0		4.5	7.0	11.0	
2400	300	4.0	6.0			4.5	7.0		
2700	350	4.5	6.0			5.5	8.0		

LEGEND:

- Bedding material (uncompacted)
- Embankment material placed in layers not exceeding 150 compacted depth.
- Compacted backfill material placed in layers not exceeding 150 compacted depth, or lean concrete backfill according to Section 614
- Impermeable backfill material

NOTE:

1. When directed, camber pipe culverts upwards from a chord through the inlet and outlet inverts an ordinate amount equal to 1% of the pipe length. Develop camber on a parabolic curve. If the midpoint elevation on the parabolic curve as designed exceeds the elevation of the inlet invert, reduce the amount of camber or increase the pipe culvert gradient.
2. For flexible pavement and aggregate surface roadways, measure minimum cover from the top of the pipe culvert to the bottom of the roadway subgrade. For rigid pavements, measure minimum cover from the top of the pipe culvert to the top of the pavement. For all roadway surface types, measure maximum fill height from the top of the pipe culvert to the top of the pavement.
3. Pipe compaction limits shown are for pipe installation in an embankment. For pipe installation in a trench, the compaction limits are the walls of the trench.
4. Where unyielding or unstable material is encountered, install the pipe culvert according to the limits of pipe compaction shown on Standard M602-3.
5. Maximum fill heights for pipe culvert installations may be increased on approval of site-specific structural pipe designs meeting the criteria of AASHTO Standard Specifications for Highway Bridges.
6. Use Supplemental Concrete Pipe Tie when specified in the contract documents.

BEDDING DEPTH

PIPE SIZE (H)	DEPTH
300 TO 1350	100
> 1350	150

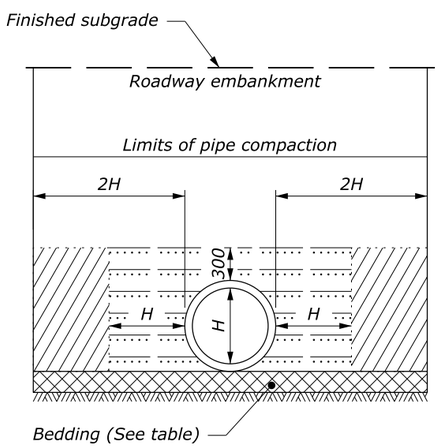

EMBANKMENT INSTALLATION

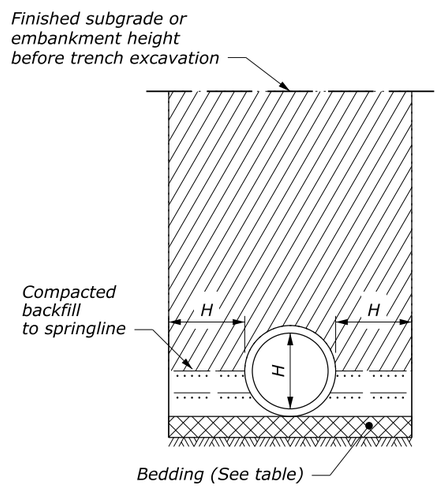

TRENCH INSTALLATION

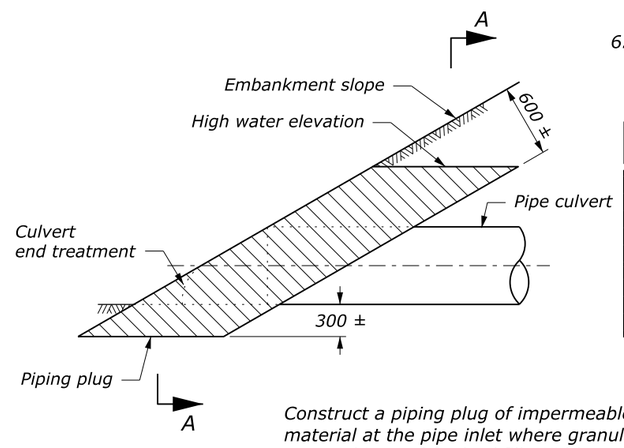

Construct a piping plug of impermeable backfill material at the pipe inlet where granular material is used for backfill. Width may be adjusted to tie into impervious material.

PIPING PLUG

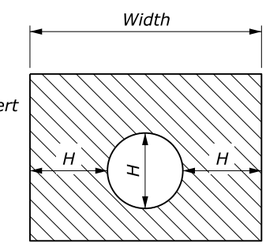

SECTION A-A

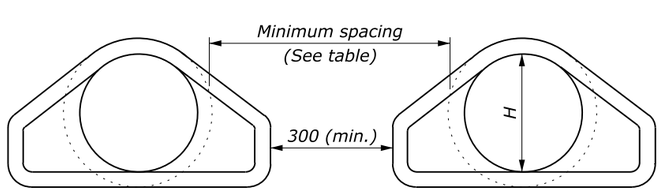

MULTIPLE ROUND PIPE INSTALLATION

MINIMUM SPACING

DIAMETER	EMBANKMENT	TRENCH
300 - 900	380	2H
900 - 2400	0.5H	1830
OVER 2400	1220	1830

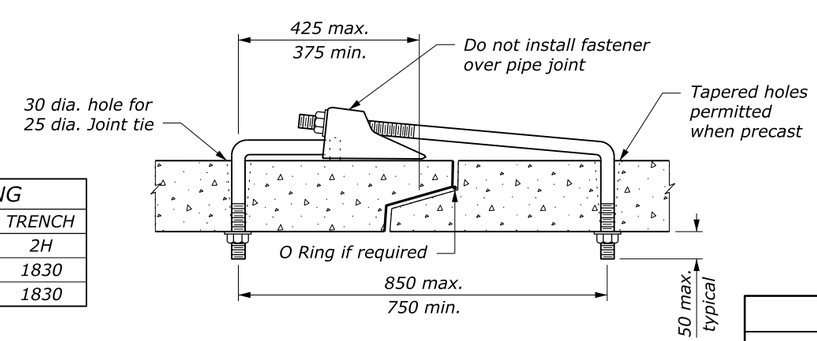

SUPPLEMENTAL CONCRETE PIPE TIE

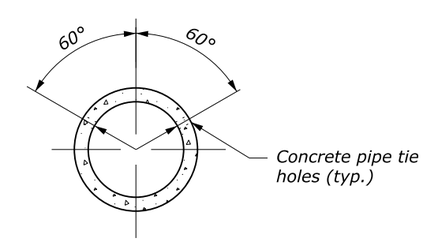

NO SCALE

This drawing contains **Metric** units of measure. Dimensions without units are millimeters.

U.S. DEPARTMENT OF TRANSPORTATION, FHWA
OFFICE OF FEDERAL LANDS HIGHWAY

CONCRETE PIPE CULVERT INSTALLATION

FLH STANDARD M602-7

SPECIFICATION FP-14

APPROVED FOR USE 8/2024